VIDE-V28702

Service Manual

ViewSonic E95

Model No. VCDTS21755-1

19" Digital Controlled Color Monitor
(18" viewable)

Copyright

Copyright © 2000 by ViewSonic Corporation. All rights reserved. No part of this publication may be reproduced, transmitted, transcribed, stored in a retrieval system, or translated into any language or computer language, in any form or by any means, electronic, mechanical, magnetic, optical, chemical, manual or otherwise, without the prior written permission of ViewSonic Corporation.

Disclaimer

ViewSonic makes no representations or warranties, either expressed or implied, with respect to the contents hereof and specifically disclaims any warranty of merchantability or fitness for any particular purpose. Further, ViewSonic reserves the right to revise this publication and to make changes from time to time in the contents hereof without obligation of ViewSonic to notify any person of such revision or changes.

Trademarks

ViewSonic is a registered trademark of ViewSonic Corporation.
All other trademarks used within this document are the property of their respective owners.

Revision History

Revision	Date	Description Of Changes	Approval
1.0	3/23/01	Initial Issue – DCN1288	T. Sears

TABLE OF CONTENTS

PRECAUTIONS & SAFETY NOTICES ..... 1~2

1. ENGINEERING SPECIFICATIONS ..... 3~20

2. OSD AND CONTROL FUNCTIONS ..... 21~27

3. CIRCUIT DIAGRAMS & WAVEFORMS ..... 28~42

4. CIRCUIT DESCRIPTION ..... 43~50

5. ADJUSTMENT PROCEDURE ..... 51~59

6. TROUBLESHOOTING FLOW CHART ..... 60~67

7. MECHANICAL ASSEMBLY DRAWINGS ..... 68~80

8. EXPLODED PARTS LIST AND DRAWING ..... 81~82

9. PCB LAYOUT DIAGRAMS ..... 83~85

10. RECOMMENDED SPARE PARTS LIST ..... 86~87

⚠ WARNING

This service information is designed for experienced repair technicians only and is not designed for use by the general public.
It does not contain warnings or cautions to advise non-technical individuals of potential dangers in attempting to service a product.
Products powered by electricity should be serviced or repaired only by experienced professional technicians.
Any attempt to service or repair the product or products dealt within this service information by anyone else could result in serious injury or death.

SAFETY PRECAUTIONS

1 CAUTION

No modification of any circuit should be attempted. Service work should only be performed after you are thoroughly familiar with all of the following safety checks and servicing guide lines.

2 SAFETY CHECK

Care should be taken while servicing this CRT display because of the high voltage used in the deflection circuits. These voltages are exposed in such areas as the associated flyback and yoke circuits.

3 FIRE & SHOCK HAZARD

3-1 Insert an isolation transformer between the CRT display and AC power line before servicing the chassis.

3-2 In servicing pay attention to original lead dress especially in the high voltage circuit. If a short circuit is found, replace all parts which have been overheated as a result of the short circuit.

3-3 All the protective devices munt be reinstalled per original design.

3-4 Soldering must be inspected for possible cold solder joints, frayed leads, damaged insulation, solder splashes or sharp solder points. Be certain to remove all foreign material.

4 LEAKAGE CURRENT COLD CHECK

4-1 Unplug the AC cord and connect a jumper between the two prongs on the plug.

4-2 Turn the CRT display power switch "on".

4-3 Measure the resistance value with an ohmmeter between the jumpered AC plug and each exposed metallic part on the CRT display such as the metal frame, screwheads, control shafts, etc. When the exposed metallic part has a return path to the chassis, the reading should be 1.8 megohm minimum.

5 LEAKAGE CURRENT HOT CHECK

5-1 Plug the AC cord directly into the AC outlet. Do not use an isolation transformer during this check.

5-2 Connect a 1500 ohm, 10 watt resistor, paralleled by a 0.15uF capacitor between each exposed metallic part and a good earth ground(as shown in Fig.1).

5-3 Use an AC voltmeter with 1000 ohm/volt or more sensitivity and measure the AC voltage across the combination 1500 ohm resistor and 0.15uF capacitor.

5-4 Move the resistor connection to each exposed metallic part and measure the voltage.

5-5 Reverse the polarity of the AC plug in the AC outlet and repeat the above measurement.

5-6 Voltage measured must not exceed 7.5 volt RMS, from any exposed metallic part to ground A leakage current tester may be used in the above hot check, in which case any current measured must not exceed 5.0 milliamp. In the case of a measurement exceeding the 5.0 milliamp value, a rework is required to eliminate the chance of shock hazard.

Note: High voltage is present when this CRT display is operating. Always discharge the anode of the picture tube to the display chassis to prevent shock hazard.

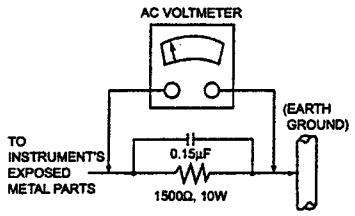

Fig. 1

6 IMPLOSION PROTECTION

Picture tubes are equipped with an integral implosion protection system, but care should be taken to avoid damage and scratching during installation.

7 X-RADIATION

WARNING : The only potential source of X-Radiation is the picture tube. However when the high voltage circuit is operating properly there is no possibility of X-Radiation problem. The basic precaution which must be exercised is to keep the high voltage at the following factory- recommended level.

Note: It is important to use an accurate periodically calibrated high voltage meter.

7-2 If high voltage cannot be set to 24kV, immediate service is required to prevent the possibility of premature component failure.

7-3 To prevent X-Radiation possibility it is essential to use the specified picture tube.

IMPORTANT SAFETY NOTICE

There are special components used in this CRT displays which are important for safety. These parts are identified by the international symbol ⚠ on the schematic diagram and on the replacement parts list. It is essential that these critical parts should be replaced with manufacture's specified parts to prevent X-RADIATION, shock, fire, or other hazards. Do not modify the original design or this will void the original parts and labor guarantee.

INDEX

		Page
1.	**Scope**	**05**
1.1	Scope	05
1.2	Product configuration / Magnetic requirements	05
2.	**Input requirements**	**06**
2.1	AC power supply	06
2.2	Video interface	06
2.3	Scanning frequency	06
3.	**Adjustment control**	**07**
3.1	User control	07
3.2	OSD adjustment function	07
3.3	LED indication	07
4.	**Electrical specification**	**08**
A.	Electrical specification	08
4.1	Standard condition of measurement	08
4.2	CRT specification	08
4.3	Power saving	08
B.	Screen characteristics	08
4.4	Picture display size	08
4.5	Picture center	08
4.6	Linearity	09
4.7	Picture distortion	09
4.8	Misconvergence	10
4.9	Focus	10
4.10	Jitters	10
4.11	White balance	10
4.12	Light output	11
4.13	Brightness uniformity	11
4.14	Size regulation	11
5.	**Environmental condition**	**12**
5.1	Temp and humidity at operation	12
5.2	Temp and humidity at storage	12
5.3	Vibration test (packaged)	12
5.4	Drop test (packaged)	12
5.5	Altitude	12

INDEX

Page

6. Physical specification ---- **12**
- 6.1 Dimension ---- 12
- 6.2 Mechanical adjustment ---- 12
- 6.3 Packaging ---- 12

7. Manuals and documentation ---- **13**
- 7.1 Inserted materials ---- 13

8. Regulatory and Safety ---- **13**
- 8.1 North America ---- 13
- 8.2 International ---- 13
- 8.3 Power management ---- 13

9. Video communications ---- **13**
- 9.1 EDID standard and structure ---- 13
- 9.2 EDID vendor name ---- 13
- 9.3 EDID product ID ---- 13
- 9.4 EDID established timing ---- 13
- 9.5 Approvals ---- 13
- 9.6 USB(Optional) ---- 13

10. Coding assignment ---- **14**
- 10.1 Product name and Model number ---- 14
- 10.2 Serial number format ---- 14
- 10.3 Regional product ID code ---- 14
- 10.4 UPC coding ---- 14
- 10.5 FCC ID code ---- 14

Appendix A : Factory preset timings ---- 15
- Timing char : E95-1 ---- 16

Appendix B : DDC contents for E95 ---- 18

1. Scope.

1.1 This specification defines the configuration and performance requirements for the ViewSonic corporation E95-1 family of computer monitor.

1.2 Product configuration/Magnetic requirements

E95-1

Model number	Location	Magnetic requirement
VCDTS21755-1M	North America	Bh=250mG±10mG,Bv=490mG±10mG
VCDTS21755-1E	Europe	Bh=250mG±10mG,Bv=430mG±10mG

2. Input requirements

2.1 AC power supply.

2.1.1 Power source : 90~264VAC, 50/60Hz.
2.1.2 Power consumption : Less than 130W (E95-1).
2.1.3 Inrush current : Less than 40Ao-p for 1/2 cycle on cold starting.
2.1.4 Input current : 3A max.
2.1.5 Leakage current : 0.75mA at AC 100V/240V.
2.1.6 Ripple / noise : Should not cause any visible interference.
2.1.7 Power cable / color : 1.83 meter / match with cabinet.
(R) M model : 3-prong NEMA 5-1 5P type plug
E model : Shuko CEE7-7

2.2 Video interface.

2.2.1 RGB video : Analog, 0.7Vp-p, positive, input impedance 75ohm.
2.2.2 Max PC video signal : 950mV with no damage to monitor.
2.2.3 Max MAC video signal : 1250mV with no damage to monitor.
2.2.4 Sync signal : Separate or composite horizontal and vertical sync (TTL level).
2.2.5 Signal cable / color :1.83 meter ivory PC99 / match with cabinet.
2.2.5 Input connector :
15 pin mini "D" sub :

Pin No.	Signal	Pin No.	Signal
1	Red	9	NC
2	Green	10	Ground
3	Blue	11	Ground
4	Ground	12	SDA
5	Ground	13	H. Sync
6	R Return	14	V. Sync
7	G Return	15	SCL
8	B Return		

2.2.6 Signal memory modes : 13 preset modes
18 user modes, see **Appendix A.**
2.2.7 Plug & play : VESA DDC1 / 2B, DDC data **Appendix B.**
2.2.8 Input signal timing compatibility : VESA GTF

2.3 Scanning frequency.

2.3.1 Horizontal : 30KHz to 95KHz
2.3.2 Vertical : 50Hz to 180Hz

3. Adjustment control

3.1 User control.

3.1.1 Power switch.

3.1.2 OSD key.

[1] : Function select button.

▽ : Adjustment button.

△ : Adjustment button.

[2] : Function select button.

3.2 OSD adjustment function.

a. Contrast / Brightness.
b. H. size / Position.
c. V. Size / Position.
d. Pincushion / Balance.
e. Trapezoid / Parallel.
f. Top / Bottom Hook
g. Tilt.
h. H / V Moire
i. H / V Focus
j. Input level
h. Degauss.
i. Viewmeter.
j. Viewmatch color : 9300°K / 6500°K / 5000 °K User (R, G, B).
k. Language.
l. Memory recall.

3.3 LED indication.

Status			LED
Power on	Normal		Green
	Power saving	Stand-by Suspend Off mode	Orange
	Over range frequency		Orange
Power off			Off

4. Electrical specification.

A. Electrical specification.

4.1 Standard condition of measurement.

4.1.1 Brightness – 50% factory shipment condition.

4.1.2 Contrast – 100% factory shipment condition (MAX).

4.1.3 Preset color – 9300°K.

4.1.4 Brightness 30FL (Full white).

4.1.5 Warm up time – Start testing 30 minutes or more after power on.

4.1.6 Timing chart – Refer to **Appendix A.**

4.2 CRT specification.

Item	Spec
CRT	SAMSUNG: M46QCE261X112(A)(E95-1M) SAMSUNG: M46QCE261X112(TCO)(E95-1E)
Size	19 inch
Diagonal(Viewable area)	18 inch
Mask type	Shadow Mask
Pitch	0.26mm
Faceplate treatment	AGAS
Transmission percentage	49.8%

4.3 Power saving.

4.3.1 Power saving.

Status	Horizontal Sync.	Vertical Sync.	Power consumption	Power LED	Recovery time
Normal	Yes	Yes	< 130W	Green	N/A
Stand-by	No	Yes	< 15W	Orange	< 3 sec
Suspend	Yes	No	< 15W	Orange	< 3 sec
Off	No	No	< 3W	Orange	< 10 sec

B. Screen characteristics.

4.4 Picture display size.

Horizontal size : 357± 4mm (primary mode) / 357± 5mm (other mode).

Vertical size : 268± 4mm (primary mode) / 268± 5mm (other mode).

4.5 Picture center.(Correctable to zero)

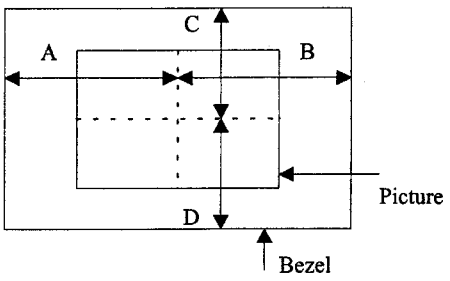

| A - B | ≦ 4mm for primary preset

| A - B | ≦ 5mm for other preset

| C - D | ≦ 4mm for primary preset

| C - D | ≦ 5mm for other preset

4.6 Linearity.

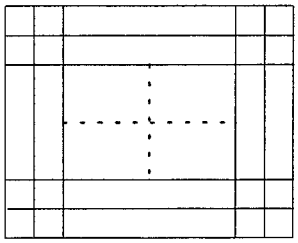

$$\text{H-Linearity} : \frac{Xmax - Xmin}{Xmax + Xmin} \times 100\% \quad \leqq 4\% \text{ for adjacent}, \leqq 5\% \text{ for worst case}$$

$$\text{V-Linearity} : \frac{Ymax - Ymin}{Ymax + Ymin} \times 100\% \quad \leqq 4\% \text{ for adjacent}, \leqq 5\% \text{ for worst case}$$

Input singal : Cross-hatch pattern
16x12

4.7 Picture distortion

4.7.1 Trapezoid / Parallelogram / Orthogonality / 2mm Box.

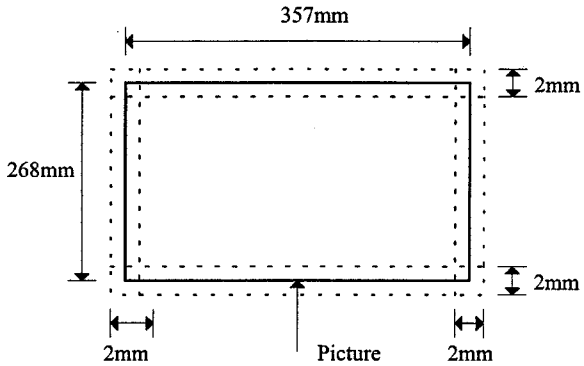

Trapezoid:

Horizontal	≦ 2mm
Vertical	≦ 1.5mm
Parallelogrm	≦ 2mm
Orthogonality	≦ 1.0degrees

4.7.2 Pincushion / Barrel / Pin-balance.

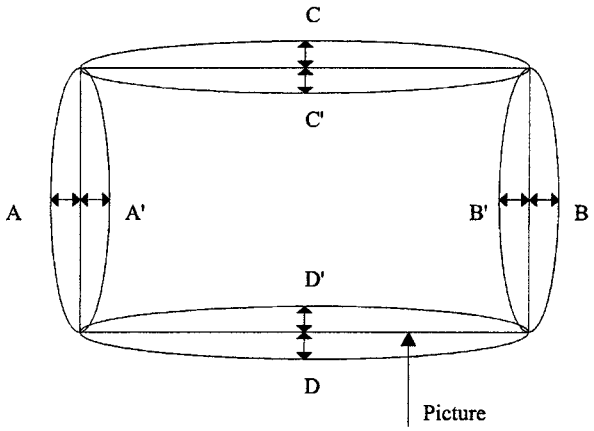

Pincushion	≦ 1.5mm
Barrel	≦ 1.5mm

4.7.3 Tilt.(adjustable to zero)

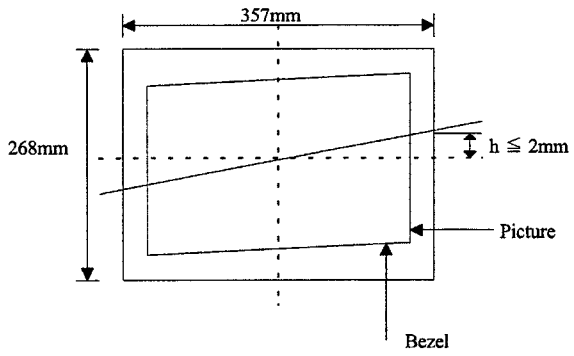

4.8 Misconvergence.

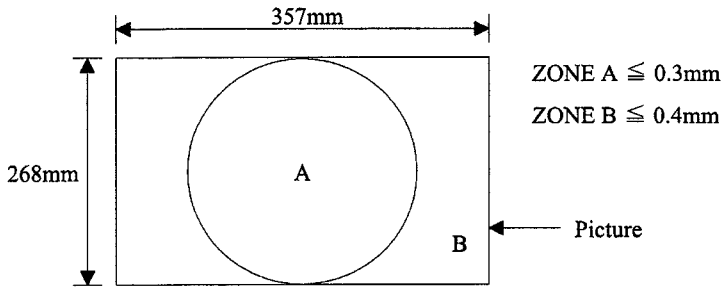

4.9 Focus.

4.9.1 Under the condition of brightness center and contrast maximum "mE", pattern can be seen clearly by using the 1024x768 60K/75Hz. If necessary, limit sample agreed by both parties will be made for final focus judgement.

4.10 Jitters : Less than 0.1mm.

4.11 White balance.

4.11.1 Color temperature : Using the CIE color temperature coordinate system.

Color 9300°K :	x = 0.283± 0.02.	$\triangle u'v' \leqq 0.01$
	y = 0.297± 0.02.	
Color 6500°K :	x = 0.313± 0.02.	$\triangle u'v' \leqq 0.01$
	y = 0.329± 0.02.	
Color 5000°K :	x = 0.346± 0.02.	$\triangle u'v' \leqq 0.01$
	y = 0.359± 0.02.	

4.11.2 Color tracking : When the full white pattern display at preset condition. (only for 9300°K)

$|x_{25.75FL} - x_{10FL}| \leq 0.007$

$|x_{25.75FL} - x_{30FL}| \leq 0.003$

$|y_{25.75FL} - y_{10FL}| \leq 0.007$

$|y_{25.75FL} - y_{30FL}| \leq 0.003$

4.11.3 Video amplifier linearity, input step :
$|x_{600mV} - x_{700mV}| \leq 0.007$.
$|y_{600mV} - y_{700mV}| \leq 0.003$.

4.11.4 Color purity : Impurity should not appear in the pattern of all green, all red, or all white.

4.12 Light output.

4.12.1 At 70mm x 70mm white block pattern : 40± 4FL.
4.12.2 At full-white pattern : 30± 2FL.

4.13 Brightness uniformity.

4.13.1 25% deviation maximum between center any eight points within the display picture.

A	B	C
D	Center	E
F	G	H

4.14 Image regulation.

4.14.1 Static regulation ≤ 1mm.
4.14.2 Dynamic regulation ≤ 1mm.
4.14.3 Temperature and line voltage ≤ 0.5% of line length.

5. Environmental conditions.

5.1 Temperature and humidity at operation : 0°C ~40°C.
5% ~ 95% RH (Non condensing).

5.2 Temperature and humidity at storage : -40°C ~ 60°C.
5 ~ 95% RH (Non condensing).

5.3 Vibration test (packaged) :

Vibration Frequency	: 5 ~ 250Hz.
Acceleration	: 1G.
Sweep time	: 1 oct. / min.
Test time	: 60 min per axis.

5.4 Drop test (packaged) : 70cm height.
1 corner, 3 edges, 6 faces.

5.5 Altitude :

Operating	: 0 ~ 3000 feet.
Non-operating	: 0 ~ 12000 feet.

6. Physical specification.

6.1 Dimension.

	E95-1
Height	463.8mm
Width	448mm
Depth	463mm
Footprint width	260mm
Footprint depth	255mm
Monitor weight	19.5Kg

6.2 Mechanical adjustment.

Tilt	- 5 / + 15 degrees.
Swivel	± 90 degrees.

6.3 Packaging.

6.3.1 Carton dimension.

	E95-1
Model	
Height	526mm
Width	568mm
Depth	588mm

6.3.2 Shipping weight : 23Kg

6.3.3 Container loading ; 320units

7. Manuals and documentation

7.1 Inserted materials :
Production sample of the User's Guide ,Rear Label and all other Inserted Materials will be provided to ViewSonic for approval before mass production.

8. Regulatory and Safety

8.1 North America
Model name : E95-1M
UL1950 ; CUL ; DHHS 21 CFR, Subchapter J ; FCC part 15, class B ; ICES-003, class B ; CB ; MPRII ; TUV/S (Argentina) ; NOM.

8.2 International
Model name : E95-1E
UL1950 ; CUL ; DHHS part 21 CFR, Subchapter J ; FCC part 15, class B ; ICES-003, class B ; CB ; CE ; MPRII ; TCO99 ; TUV/GS ; TUV/Ergo ; NEMKO ; SEMKO ; DEMKO ; FEMKO ; PCT ; B-Mark.

8.3 Power Management
EPA (Energy star) ; E2000 (off state < 3 watts)

9. Video communications

9.1 EDID Standard and Structure
VESA's EDID Standard Version #3, Revision #0, EDID Structure Version #1.3, Revision #1.

9.2 EDID Vendor Name
VSC: Byte 8 – 5Ah, Byte 9 – 63h.(E95)

9.3 EDID Product ID
The shall be encoded as an ASCII representation of the first two digits of the North American serial number.
Byte 10 = 04h, Byte 11 = 90h (E95)

9.4 EDID Established Timing
Shall match with the factory timing settings specified by ViewSonic above in section 6.0.

9.5 Approvals
File contents shall be approved by ViewSonic prior to Mass Production Release.

9.6 USB(Optional)
A High Speed Active (one upstream port and four downstream ports) Hub shall be quoted as an option. The USB cable supplied with the unit shall be two meters long. A Host on Screen Display, based on ViewSonic Screens, compatible with Microsoft Windows 95 "4.00.950 B" and Windows 98, shall be supplied.

10. Coding assignment

10.1 Product Name and Model Number.
Product Name : View Sonic E95

North America	Model Number VCDTS21755-1M
Europe	Model Number VCDTS21755-1E

10.2 Serial Number Format
PPPYYWWnnnnn where

PPP	= Regional Product ID Code
YY	= Last digit of manufacturing year
WW	= Manufacturing week
Nnnnn	= Production sequence number

(Assigned by factory)

10.3 Regional Product ID code
Model name : E95

North America	ID Code: 31V
Europe	ID Code: 324

10.4 UPC coding
Model name : E95

North America	UPC Code: 7 66907 43523 8
Europe	UPC Code: 7 66907 44281 6

10.5 FCC ID code
Self-Declared

Appendix A : Factory preset timings.

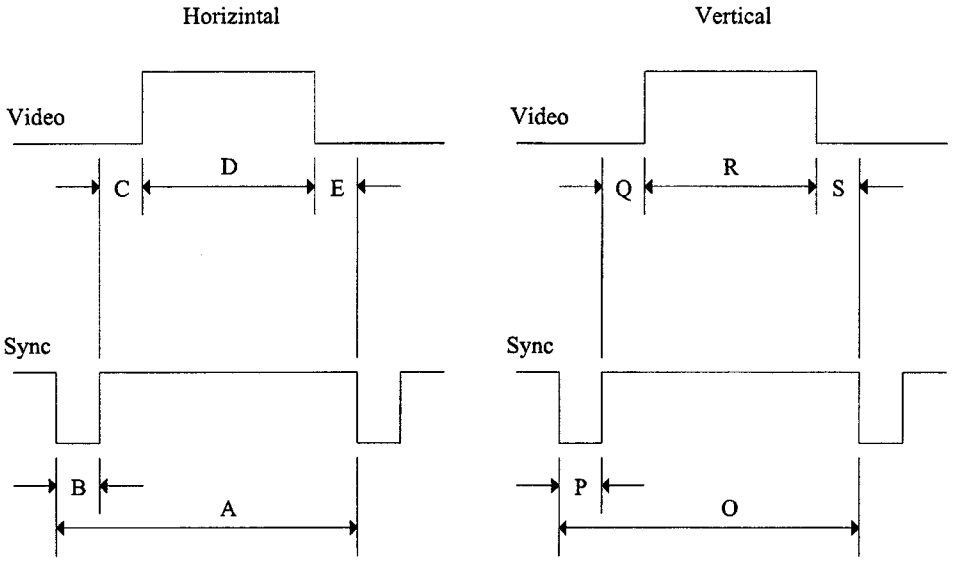

Sync Polarity : Positive / Necgative

Timing chart : E95-1

Mode No.	1	2	3	4	5	6	7	8	9	10
Mode Name	VGA 640 x 400	VGA 640 x 480	VGA 640 x 480	VESA 800 x 600	VESA 800 x 600	VESA 1024 x 768	VESA 1024 x 768	VESA 1280 x 1024	VESA 1280x 1024	VESA 1280x 1024
Horizontal Freq. (KHz)	31.469		37.500	46.875	53.674	60.023	68.677	63.981	79.976	91.146
Sync. Polarity	–	–	–	+	+	+	+	+	+	+
A H. total(us)	31.778		26.666	21.333	18.631	16.660	14.561	15.63	12.504	10.971
(Dots)	(800)		(840)	(1056)	(1048)	(1312)	(1312)	(1688)	(1688)	(1728)
B H. sync(us)	3.813		2.032	1.616	1.138	1.219	1.016	1.037	1.067	1.061
(Dots)	(96)		(64)	(80)	(64)	(96)	(96)	(112)	(144)	(160)
C H. back porch(us)	1.907		3.809	3.232	2.702	2.235	2.201	2.296	1.837	1.422
(Dots)	(48)		(120)	(160)	(152)	(176)	(208)	(248)	(248)	(224)
D H. active(us)	25.422		20.317	16.162	14.222	13.003	10.836	11.852	9.481	8.127
(Dots)	(640)		(640)	(800)	(800)	(1024)	(1024)	(1280)	(1280)	(1280)
E H. front porch(us)	0.636		0.508	0.323	0.569	0.203	0.508	0.444	0.119	0.406
(Dots)	(16)		(16)	(16)	(32)	(16)	(48)	(48)	(16)	(64)
Vertical Freq. (Hz)	70.089	59.940	75.000	75.000	85.000	75	85.000	60.200	75.025	85.024
Sync. Polarity	+	–	–	+	+	+	+	+	+	+
O V. total(ms)	14.268	16.684	13.333	13.333	11.756	13.853	11.765	16.661	13.329	11.761
(Lines)	(449)	(525)	(500)	(625)	(631)	(666)	(808)	(1066)	(1066)	(1072)
P V. sync(ms)	0.064	0.064	0.080	0.064	0.056	0.125	0.044	0.047	0.038	0.033
(Lines)	(2)	(2)	(3)	(3)	(3)	(6)	(3)	(3)	(3)	(3)
Q V. back porch(ms)	1.112	1.048	0.426	0.448	0.503	0.478	0.524	0.594	0.475	0.483
(Lines)	(35)	(33)	(16)	(21)	(27)	(23)	(36)	(38)	(38)	(44)
R V. active(ms)	12.711	15.254	12.800	12.800	11.179	12.480	11.183	16.005	12.804	11.235
(Lines)	(400)	(480)	(480)	(600)	(600)	(600)	(768)	(1024)	(1024)	(1024)
S V. front porch(ms)	0.381	0.381	0.027	0.021	0.019	0.770	0.015	0.016	0.013	0.011
(Lines)	(12)	(10)	(1)	(1)	(1)	(37)	(1)	(1)	(1)	(1)
Video clock Freq. (MHz)	25.175		31.501	49.500	56.250	56.250	94.500	108.00	135	157.5
(ns)	(39.72)		(31.7)	(20.2)	(17.78)	(17.78)	(10.58)	(9.26)	(7.4)	(6.3)

Timing chart : E95-1

Mode No.	11	12	13
Mode Name	VESA 1600x 1200	MAC 832 x 624	MAC 1152X 870
Horizontal Freq. (KHz)	93.75	49.717	68.681
Sync. Polarity	+	–	-
A H. total(us)	10.667	20.115	14.56
(Dots)	(2160)	(1152)	(1456)
B H. sync(us)	0.948	1.118	1.280
(Dots)	(192)	(64)	(128)
C H. back porch(us)	1.501	3.911	1.44
(Dots)	(304)	(224)	(144)
D H. active(us)	7.901	14.528	11.52
(Dots)	(1600)	(832)	(1152)
E H. front porch(us)	0.316	0.558	0.32
(Dots)	(64)	(32)	(32)
Vertical Freq. (Hz)	75	74.530	75
Sync. Polarity	+	–	–
O V. total(ms)	13.333	13.417	13.322
(Lines)	(1250)	(667)	(915)
P V. sync(ms)	0.032	0.060	0.044
(Lines)	(3)	(3)	(3)
Q V. back porch(ms)	0.491	0.784	0.568
(Lines)	(46)	(39)	(39)
R V. active(ms)	12.8	12.552	12.667
(Lines)	(1200)	(624)	(870)
S V. front porch(ms)	0.011	0.021	0.044
(Lines)	(1)	(1)	(3)
Video clock Freq. (MHz)	202.5	57.270	100
(ns)	(4.9)	(17.5)	(10)

Appendix B :

VIEWSONIC CORPORATION
EDID Version # 1, Revision # 3
DDC Test For: VSC E95

---

128 bytes of EDID code.

	0	1	2	3	4	5	6	7	8	9
0	00	FF	FF	FF	FF	FF	FF	00	5A	63
10	04	90	01	01	01	01	01	0B	01	03
20	1D	25	1B	BA	EB	5E	88	A3	53	46
30	98	24	11	48	4C	FF	FF	80	81	8F
40	61	59	45	59	71	4F	81	59	81	99
50	A9	40	A9	4F	BC	34	00	98	51	00
60	2A	40	10	90	13	00	65	0C	11	00
70	00	1E	00	00	00	FF	00	33	31	56
80	30	31	30	31	30	30	30	30	31	0A
90	00	00	00	FD	00	32	B4	1E	5F	14
100	00	0A	20	20	20	20	20	20	00	00
110	00	FC	00	45	39	35	0A	20	20	20
120	20	20	20	20	20	20	00	7E		

(08-09) ID Manufacturer Name_____ = VSC
(10-11) Product ID Code_____ = 0490
(12-15) Last 5 Digits of Serial Number _____ = Not Used
(16) Week of Manufacture_____ = 01
(17) Year of Manufacture _____ = 2001
(10-17) Complete Serial Number _____ = See Descriptor Block
(18) EDID Version Number_____ = 1
(19) EDID Revision Number_____ = 3
(20) VIDEO INPUT DEFINITION:
Analog Signal
0.700, 0.300 (1.000 Vp-p)
Blank-to-Black Setup, Separate Syncs, Composite Sync,
Serration of the Vsync
(21) Maximum Horizontal Image Size_____ = 370mm
(22) Maximum Vertical Image Size_____ = 270mm
(23) Display Gamma_____ = 2.86
(24) Power Management and Supported Feature(s):
Stand-By, Suspend, Active Off/Very Low Power,
Preferred Timing mode, Default GTF Supported
Display Type = R/G/B Color

(25-34) CHROMA INFO:
Red X - 0.638 Green X - 0.276 Blue X - 0.143 White X - 0.283
Red Y - 0.325 Green Y - 0.596 Blue Y - 0.066 White Y - 0.297

(35) ESTABLISHED TIMING I:
720 X 400 @ 70Hz (IBM,VGA)
720 X 400 @ 88Hz (IBM,XGA2)
640 X 480 @ 60Hz (IBM,VGA)
640 X 480 @ 67Hz (Apple, Mac II)
640 X 480 @ 72Hz (VESA)
640 X 480 @ 75Hz (VESA)
800 X 600 @ 56Hz (VESA)
800 X 600 @ 60Hz (VESA)

(36) ESTABLISHED TIMING II:
800 X 600 @ 72Hz (VESA)
800 X 600 @ 75Hz (VESA)
832 X 624 @ 75Hz (Apple, Mac II)
1024 X 768 @ 87Hz(Interlaced 8514a, IBM)
1024 X 768 @ 60Hz (VESA)
1024 X 768 @ 70Hz (VESA)
1024 X 768 @ 75Hz (VESA)
1280 X 1024 @ 75Hz (VESA)

(37) Manufacturer's Reserved Timing:
1152 X 870 @ 75Hz (Apple, Mac II)

(38-53) Standard Timing Identification:
1280 X 1024 @75Hz
1024 X 768 @85Hz
800 X 600 @85Hz
1152 X 864 @75Hz
1280 X 960 @85Hz
1280 X 1024 @85Hz
1600 X 1200 @60Hz
1600 X 1200 @75Hz

(54-71) Detailed Timing / Descriptor Block 1:
1280x1024 Pixel Clock: 135MHz

Horizontal Image Size	: 357 mm	Vertical Image Size: 268 mm
Refreshed Mode	: Non-Interlaced	Normal Display - No Stereo

Horizontal:

Active Time	: 1280 pixels	Blanking Time: 408 pixels
Sync Offset	: 16 pixels	Sync Pulse Width: 144 pixels
Border	: 0 pixels	Frequency: 79.98KHz

Vertical:

Active Time	: 1024 lines	Blanking Time: 42 lines
Sync Offset	: 1 lines	Sync Pulse Width: 3 lines
Border	: 0 lines	Frequency: 75.02 Hz

Digital Separate, Horizontal Polarity (+) Vertical Polarity (+)

(72-89) Detailed Timing / Descriptor Block 2:

Monitor Serial Number:
31V010100001

(90-107) Detailed Timing / Descriptor Block 3:

Monitor Range Limits:

Min Vertical Freq	- 50Hz
Max Vertical Freq	- 180Hz
Min Horiz. Freq	- 30KHz
Max Horiz. Freq	- 95KHz
Pixel Clock	- 200MHz
Secondary GTF	- Not Supported

(108-125) Detailed Timing / Descriptor Block 4:

Monitor Name:
E95

(126) No Extension EDID Block(s)
(127) Checksum OK

2. OSD (on screen display) Function Control

- Main Menu 1
  - Contrast / Brightness
  - H. size / Position
  - V. size / Position
  - Pincushion / Balance
  - Trapezoid / Parallel
  - Top /Bottom Hook
  - H / V Focus
  - Tilt
- Main Menu 2
  - Degauss
  - H/V Moire
  - Viewmatch color
  - Video Level
  - Language
  - OSD Position
  - Viewmeter
  - Memory Recall

Front Control Panel for E95-1

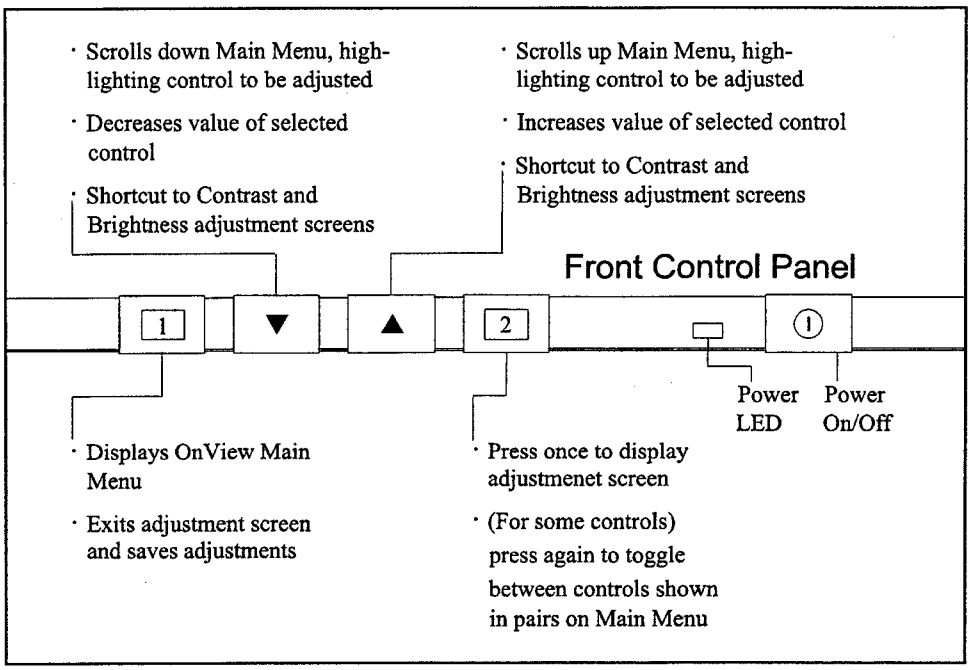

Using the Front Control Panel to access OnView screens

1. To turn the monitor on, press the Power button (shown above).
2. To display to OnView Main Menu, press button [1] .
3. To select a user control, press the ▼ or ▲ button repeatedly until the control is **High lighted.**
4. To display an OnView adjustment screen, press button [2] .
   Some controls are grouped in pairs on the Main Menu (see page 12). Press button [2] to toggle between them.
5. To adjust the selected user control, press the ▼ or ▲ button.
   Exception: For user controls that do not require adjustments, press button [2] again to activate. (examples: Degauss, Memory Recall).
6. To save your adjustments and exit all screens, press button [1] *twice.*
   The screen will clear automatically about 30 seconds after the last control button you press. To return to the Main Menu, repeat step 2.

- BLANK PAGE -

H. SIZE/POSITION:

With H.SIZE/POSITION highlighted on the menu, press button [2] again to toggle between HORIZONTAL SIZE and HORIZONTAL POSITION.

HORIZONTAL SIZE

Adjusts the width of the screen image. [▲] increases width. [▼] decreases width.

HORIZONTAL POSITION

Moves the screen image left or right. [▲] moves the screen image right. [▼] moves the screen image left.

V. SIZE/POSITION:

With V.SIZE/POSITION highlighted on the menu, press button [2] again to toggle between VERTICAL SIZE and VERTICAL POSITION.

VERTICAL SIZE

Adjusts the height of the screen image. [▲] increases the screen height. [▼] decreases the screen height.

VERTICAL POSITION

Moves the screen image up and down. [▲] moves the screen up. [▼] moves the screen down.

PINCUSHION / BALANCE

With PINCUSHION/BALANCE high lighted on the menu, Press button [2] again to toggle between pincushion and Pin-balance.

PINCUSHION

Straightens the vertical sides of the screen image. [▲] curves the vertical sides outward. [▼] curves the vertical sides inward.

PIN-BALANCE

Straightens the vertical sides of the screen image. [▲] curves the vertical sides to left. [▼] curves the vertical sides to right.

TRAPEZOID/PARALLEL:

With TRAPEZOID/PARALLEL highlighted on the menu, press button [2] again to toggle between TRAPEZOID and PARALLELOGRAM.

TRAPEZOID

Makes a vertical side of the screen image parallel. [▲] widens the top and narrows the bottom. [▼] narrows the top and widens the bottom.

PARALLEL (PARALLELOGRAM)

Slants vertical edges of the screen to the left or right. [▼] slants vertical edges to left, [▲] slants vertical edges to right.

TOP /BOTTOM HOOK

With TOP HOOK highlighted on the menu, Press button [2] again to toggle between top hook and bottom hook

TOP HOOK

Straightens the top corners of the screen image. [▼] or [▲] to adjust.

BOTTOM HOOK

Straightens the bottom corners of the screen image. [▼] or [▲] to adjust.

H. / V. FOCUS

H. FOCUS fine tunes the horizontal line focus only. Press [▼] or [▲] to adjust

V. FOCUS fine tunes the vertical line focus only. Press [▼] or [▲] to adjust

TILT

Rotates the entire screen image. [▲] rotates the screen clockwise, [▼] rotates the screen counter-clockwise.

Main Menu, Part 2

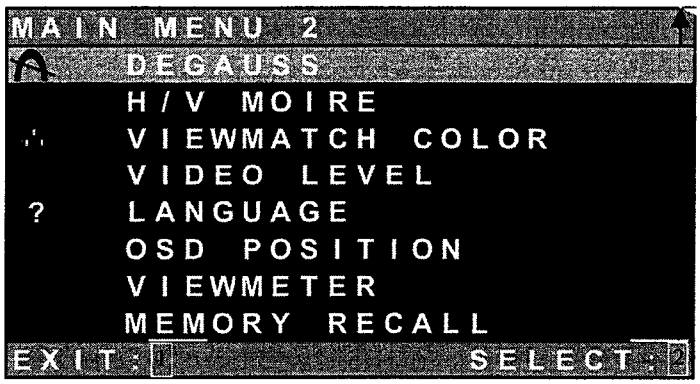

DEGAUSS

Removes the build-up of magnetic fields that can affect color purity and convergence. Press the button [2] to degauss.

H/V MOIRE

With H/V moire highlighted on the menu, Press button [2] again to toggle between H-moire and V-moire.

H MOIRE

The control adjusts for horizontal lines caused by interference between the CRT and focus gun. [▼] decrease the amount of adjustment, [▲] increases the amount of adjustment.

V MOIRE

The control adjust for vertical lines caused by interference between the CRT and focus gun. [▼] decrease the amount of adjustment, [▲] increases the amount of adjustment.

VIEWMATCH COLOR

Provides three color control options including two preset color temperatures. Press button [2] to select a color temperature or USER.

9300K

Is the factory setting that is most popular for this monitor. 9300K adds blue to the screen image for a cooler white used in most office settings with fluorescent lighting.

6500K

Adds red to screen image for warmer white and richer,more vibrant red.

5500K

Adds green to screen image for a darker color.

USER

Control adjusts reds, greens, and blues on the screen image to meet your personal preference. With the USER control screen display, press button [2] to select R, G or B. Then, press [▲] to increase and [▼] to decrease the color intensity.

VIDEO LEVEL

Allows you to change the video input signal level to match the signal coming from your computer. Press [▼] or [▲] to select 0.7V or 1.0V.

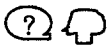

LANGUAGE

Of the MAIN MENU and the control screens. Use [▲] and [▼] to select English, French, German, Italian, or Spanish.

OSD POSITION

With OSD position highlighted on the menu, Press button [2] again to toggle between H-OSD position and V-OSD position.

VIEWMETER

Screen by ViewSonic displays the current horizontal and vertical synchronization signal (refresh rate) coming from your computer. To adjust these values, see the graphic's card user's guide for your computer.

MEMORY RECALL

Returns adjustments back to factory settings only if the monitor is operating in a factory preset mode.

Exception:

This control does not affect changes made with the **USER** color control.

Model name: ViewSonic E95-1

OSD Diagnostic Message Formats

1. When power is applied, but there is no input signal, the following is displayed:

2. If the monitor is in the DPMS mode, the following is displayed:

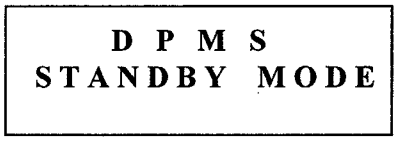

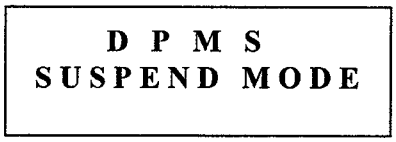

3. If the H-sync or V-sync inputs are out of range, the following is displayed:

3. Circuit diagram

1. E95-1 circuit diagram

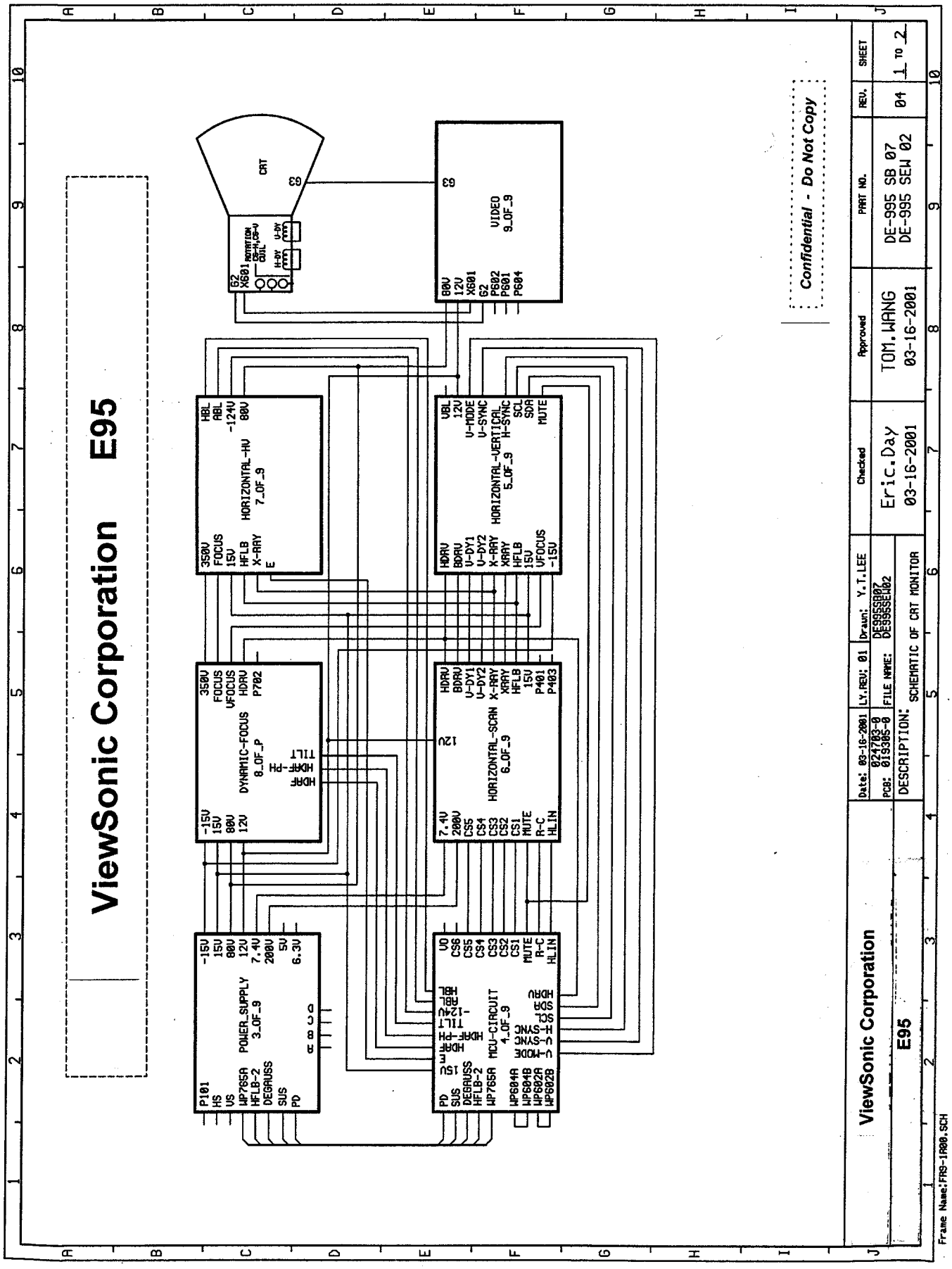
ViewSonic Corporation
E95
Confidential - Do Not Copy
CRT
VIDEO
9_OF_9
HORIZONTAL-HV
7_OF_9
HORIZONTAL-VERTICAL
5_OF_9
DYNAMIC-FOCUS
8_OF_P
HORIZONTAL-SCAN
6_OF_9
POWER_SUPPLY
3_OF_9
MCU-CIRCUIT
4_OF_9
Eric.Day
03-16-2001
TOM.WANG
03-16-2001
DE-995 SB 07
DE-995 SEW 02
SCHEMATIC OF CRT MONITOR
ViewSonic Corporation
E95

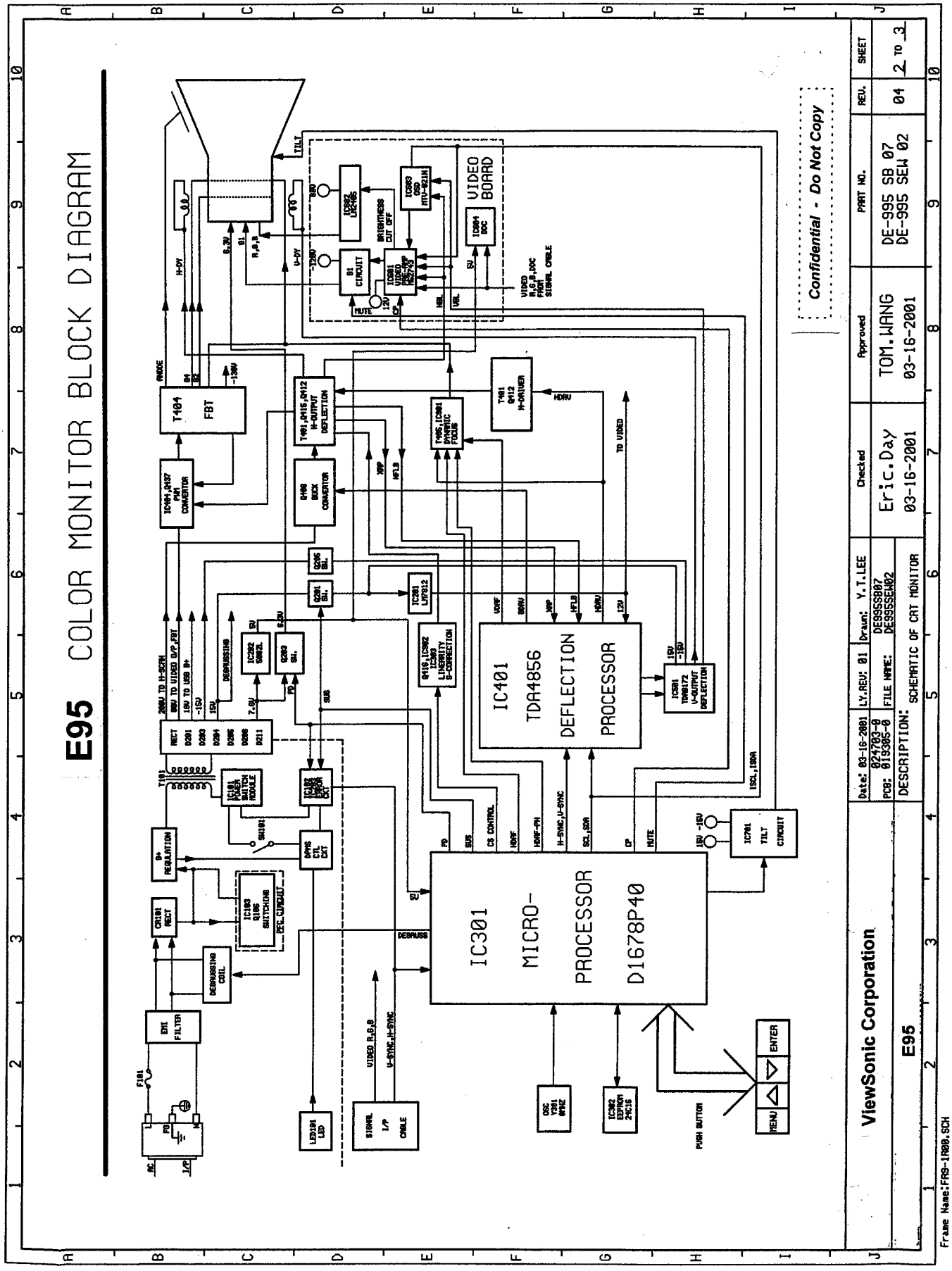
E95 COLOR MONITOR BLOCK DIAGRAM
IC401
TDA4856
DEFLECTION
PROCESSOR
IC301
MICRO-
PROCESSOR
D1678P40
VIDEO
BOARD
T404
FBT
Confidential - Do Not Copy
ViewSonic Corporation
E95
Date: 03-16-2001
LY.REV: 01
Drawn: Y.T.LEE
PCB: 019305-0
FILE NAME: DE995SB07 DE995SEW02
DESCRIPTION: SCHEMATIC OF CRT MONITOR
Checked
Eric.Day
03-16-2001
Approved
TOM.WANG
03-16-2001
PART NO.
DE-995 SB 07
DE-995 SEW 02
REV.
04
SHEET
2 TO 3
Frame Name:FR9-1R00.SCH

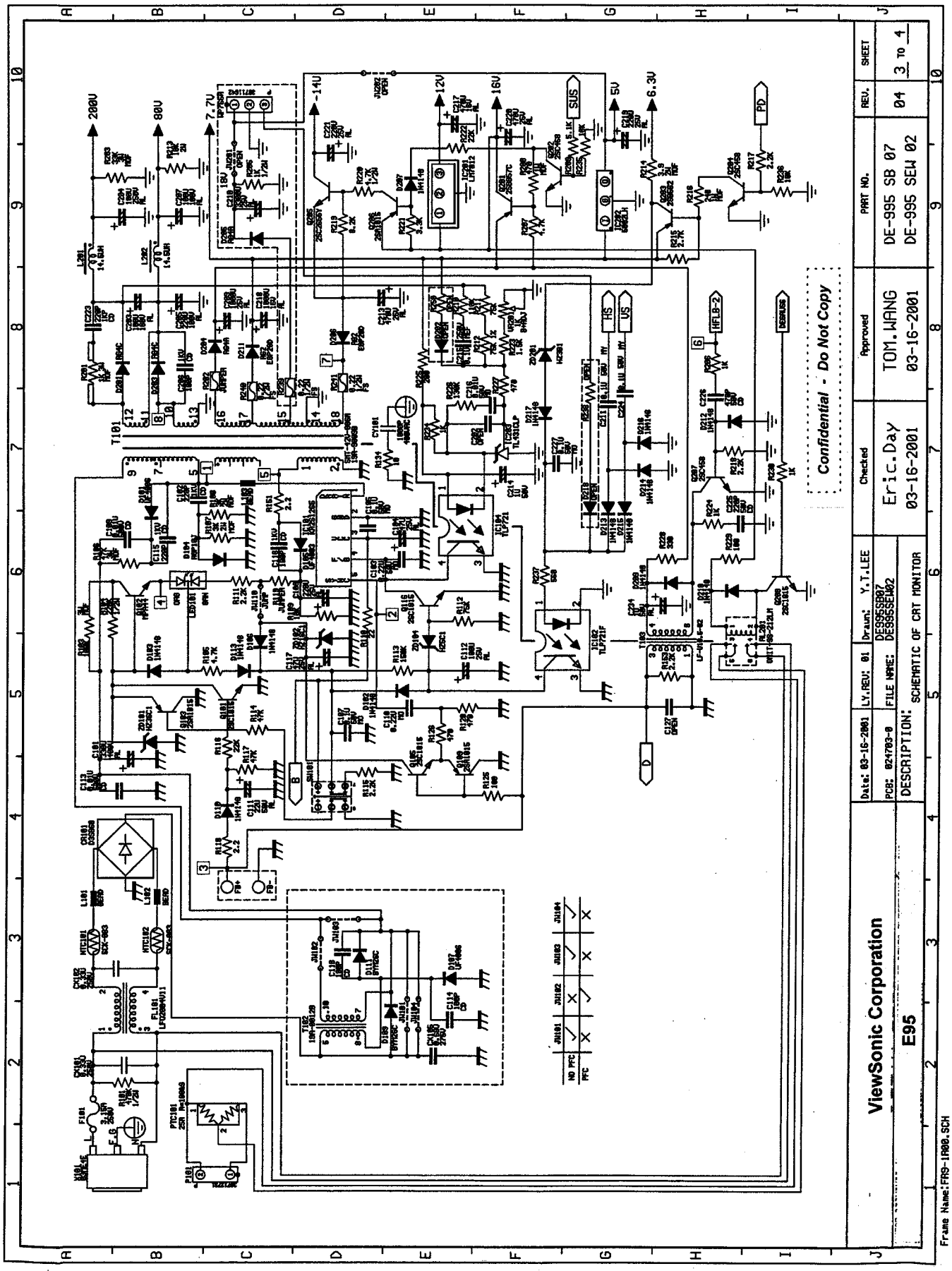
ViewSonic Corporation
E95
DESCRIPTION: SCHEMATIC OF CRT MONITOR
PCB: 024703-0
FILE NAME: DE995SEW02
LY.REV: 01
Drawn: Y.T.LEE
Date: 03-16-2001
Checked
Eric.Day
03-16-2001
Approved
TOM.WANG
03-16-2001
PART NO.
DE-995 SB 07
DE-995 SEW 02
REV.
04
SHEET
3 TO 4
Confidential - Do Not Copy
Frame Name:FR9-1R00.SCH

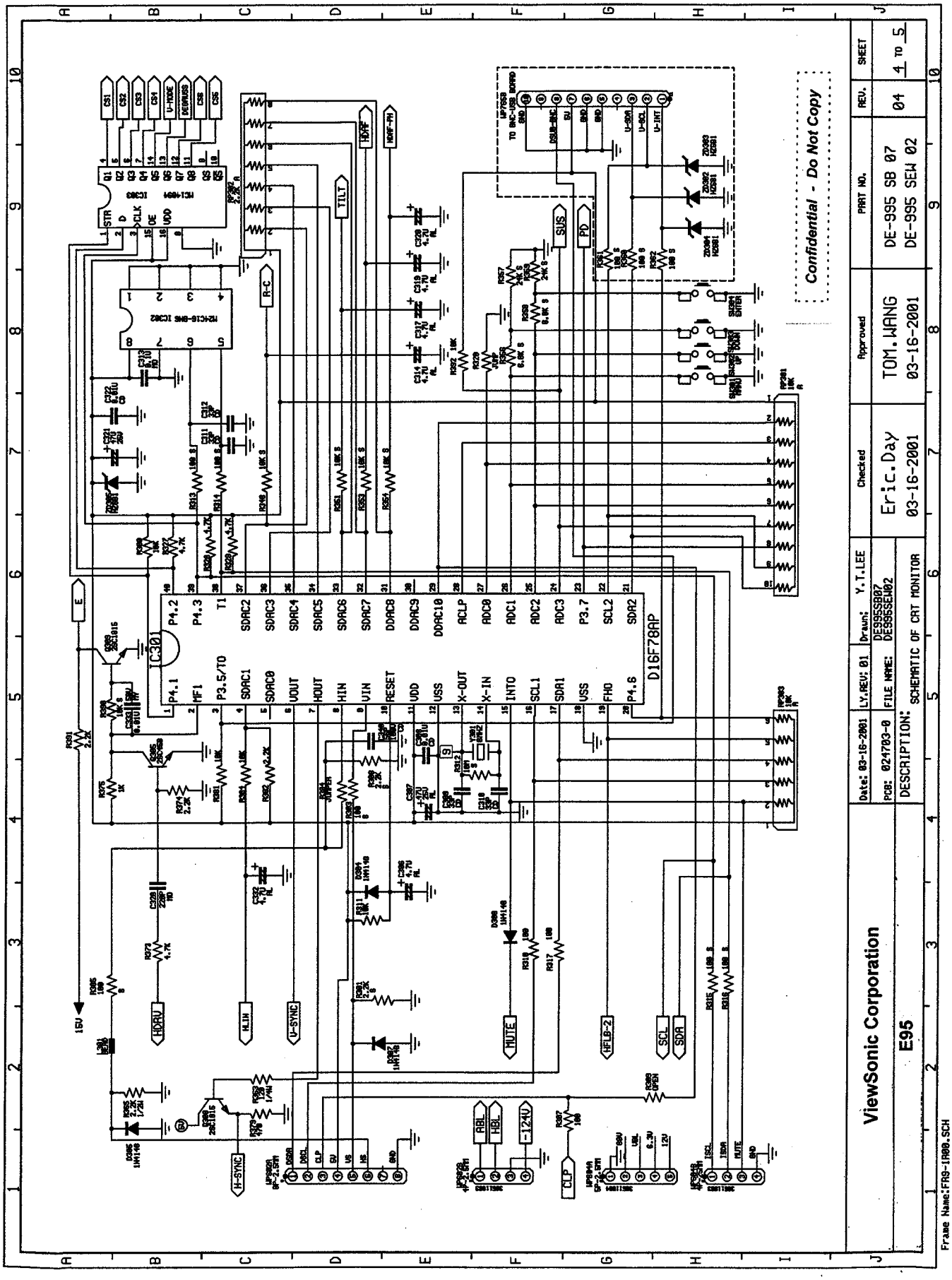
ViewSonic Corporation
E95
DESCRIPTION: SCHEMATIC OF CRT MONITOR
PCB: 024703-0
FILE NAME: DE995SEW02
LY.REV: 01
Drawn: Y.T.LEE
Date: 03-16-2001
Checked
Eric.Day
03-16-2001
Approved
TOM.WANG
03-16-2001
PART NO.
DE-995 SB 07
DE-995 SEW 02
REV.
04
SHEET
4 TO 5
Confidential - Do Not Copy
IC301
D16F78AP
Frame Name:FRS-1R00.SCH

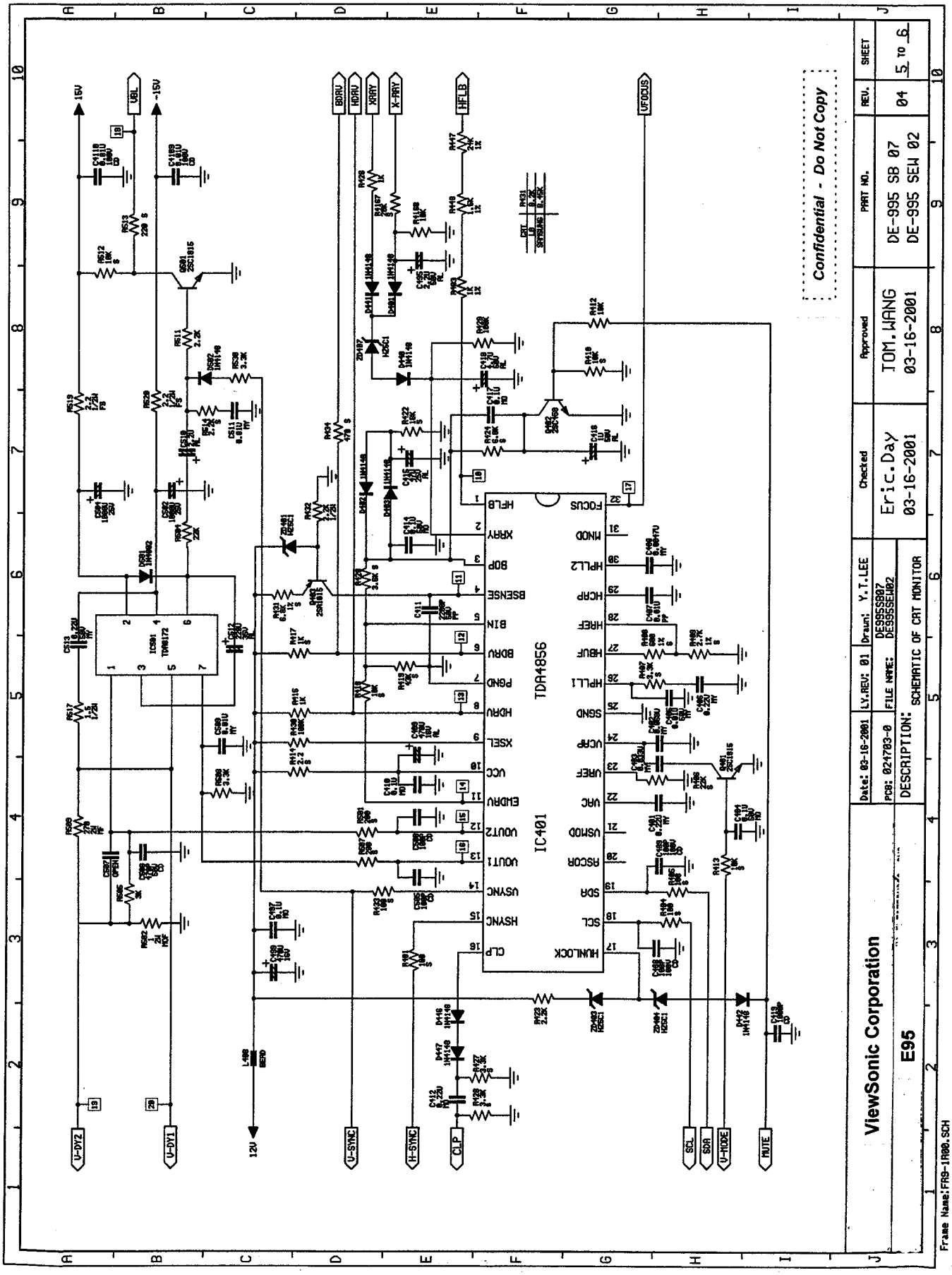

Confidential - Do Not Copy
ViewSonic Corporation
E95
Date: 03-16-2001
LY.REV: 01
Drawn: Y.T.LEE
PCB: 024703-0
FILE NAME: DE995SB07 DE995SEW02
DESCRIPTION: SCHEMATIC OF CRT MONITOR
Checked
Eric.Day
03-16-2001
Approved
TOM.WANG
03-16-2001
PART NO.
DE-995 SB 07
DE-995 SEW 02
REV.
04
SHEET
5 TO 6
Frame Name:FR9-1R00.SCH
IC401
TDA4856
IC501
TDA8172
V-DY2
V-DY1
12V
V-SYNC
H-SYNC
CLP
SCL
SDA
V-MODE
MUTE
15V
-15V
VBL
BDRV
HDRV
XRAY
X-RAY
HFLB
VFOCUS

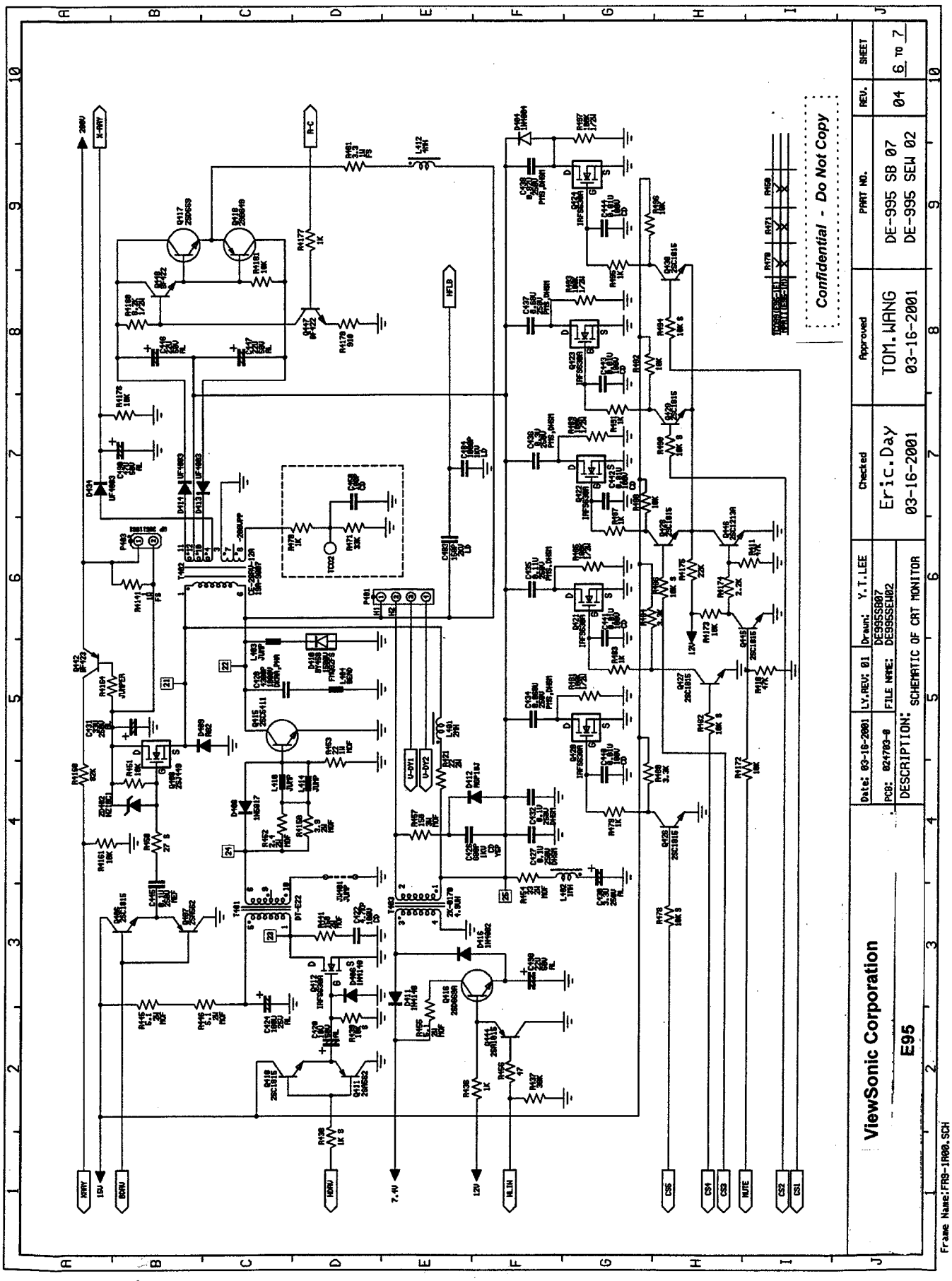
ViewSonic Corporation
E95
DESCRIPTION: SCHEMATIC OF CRT MONITOR
FILE NAME: DE995SEH02
Drawn: Y.T.LEE
LY.REV: 01
Date: 03-16-2001
PCB: 024703-0
Checked
Eric.Day
03-16-2001
Approved
TOM.WANG
03-16-2001
PART NO.
DE-995 SB 07
DE-995 SEW 02
REV.
04
SHEET
6 TO 7
Confidential - Do Not Copy
Frame Name:FR9-1R00.SCH

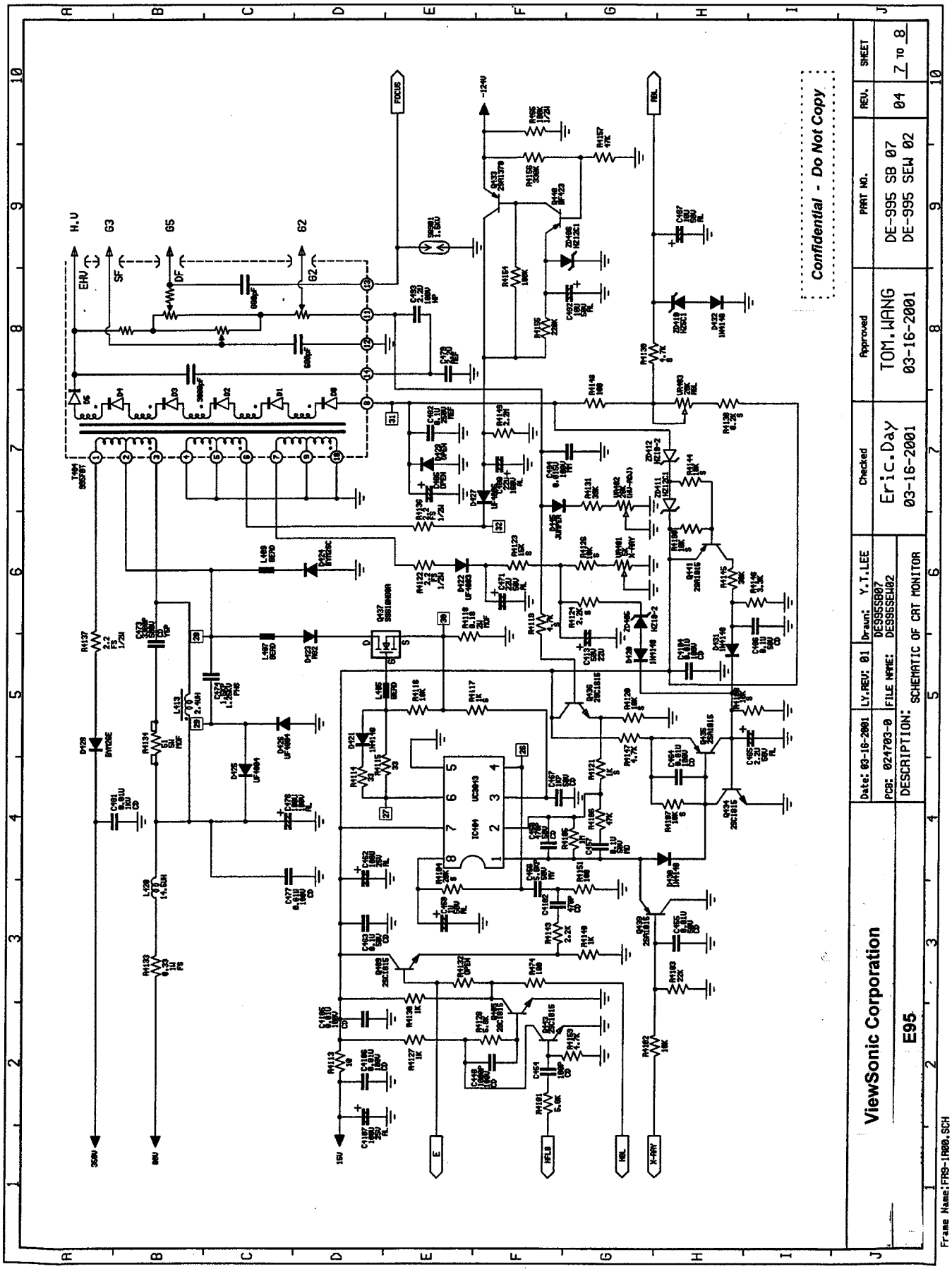
Confidential - Do Not Copy
ViewSonic Corporation
E95
DESCRIPTION: SCHEMATIC OF CRT MONITOR
FILE NAME: DE995SEW02
PCB: 024703-0
Date: 03-16-2001
LY.REV: 01
Drawn: Y.T.LEE
Checked
Eric.Day
03-16-2001
Approved
TOM.WANG
03-16-2001
PART NO.
DE-995 SB 07
DE-995 SEW 02
REV.
04
SHEET
7 TO 8
Frame Name:FR9-1R00.SCH

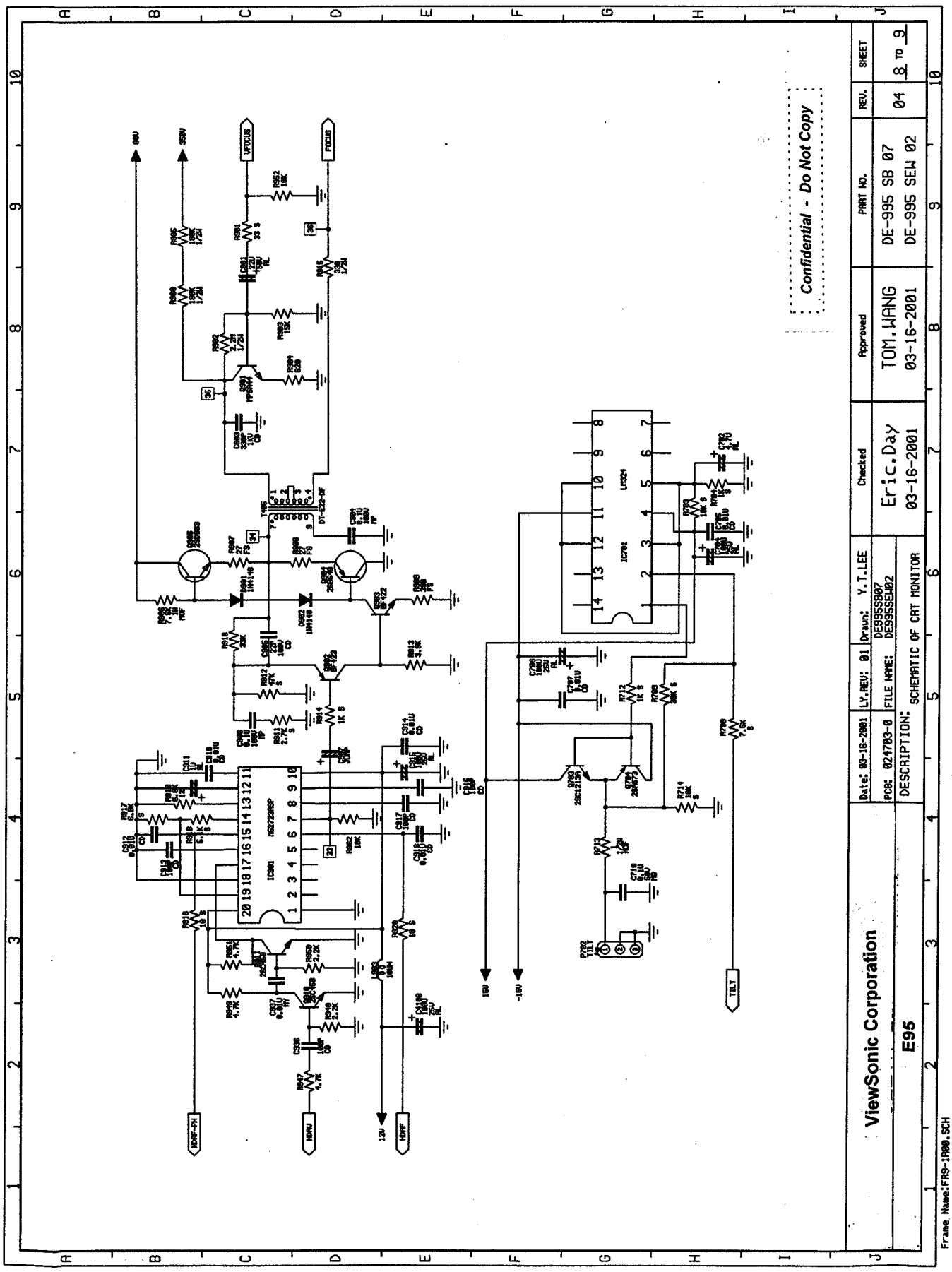
Confidential - Do Not Copy
ViewSonic Corporation
E95
Checked
Eric.Day
03-16-2001
Approved
TOM.WANG
03-16-2001
PART NO.
DE-995 SB 07
DE-995 SEW 02
REV.
04
SHEET
8 TO 9
Date: 03-16-2001
PCB: 024703-0
DESCRIPTION: SCHEMATIC OF CRT MONITOR
LY.REV: 01
FILE NAME: DE995SB07 DE995SEW02
Drawn: Y.T.LEE
Frame Name:FR9-1R00.SCH

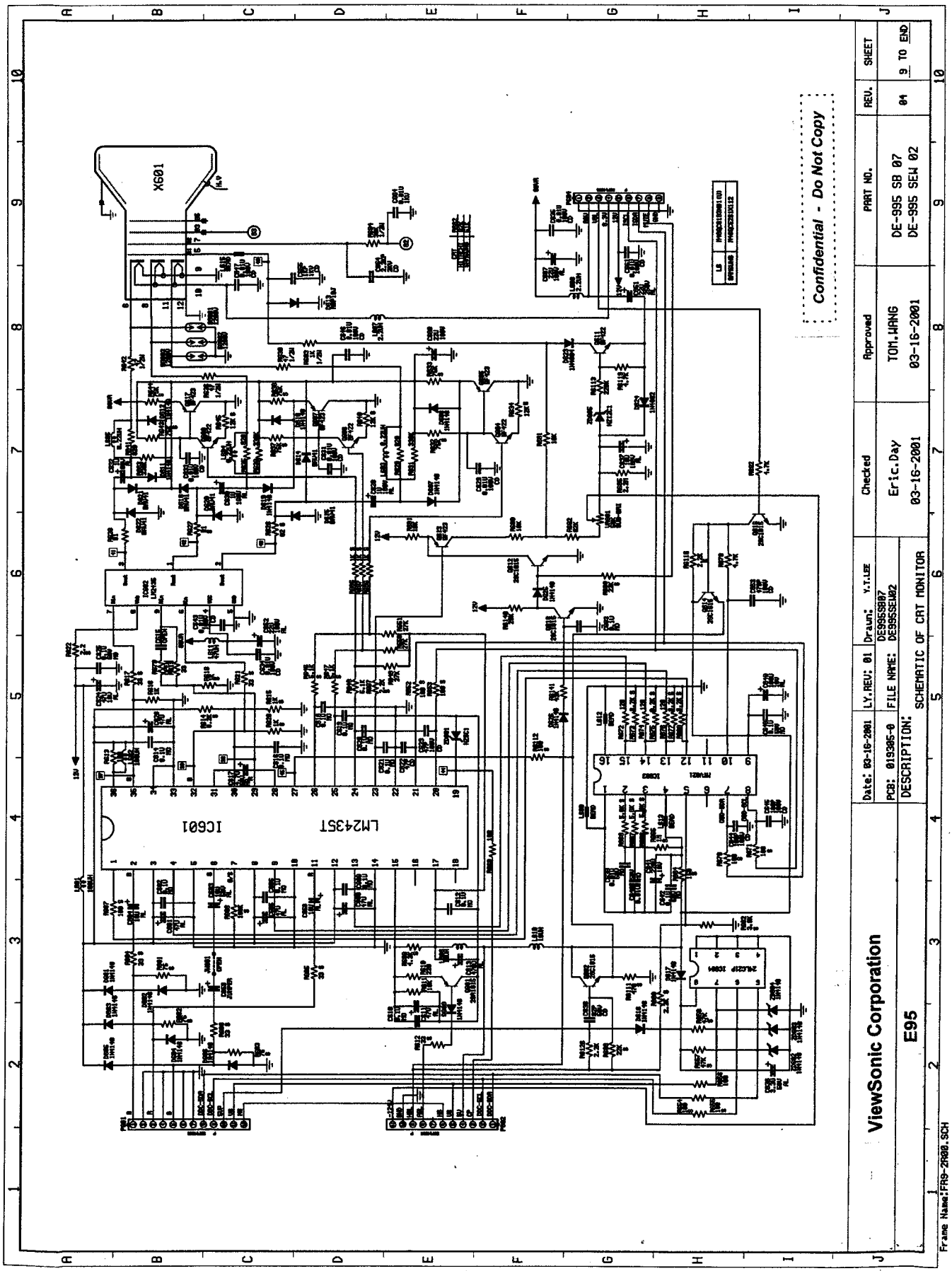

Confidential - Do Not Copy
ViewSonic Corporation
E95
Date: 03-16-2001
LY.REV: 01
Drawn: Y.T.LEE
PCB: 019305-0
FILE NAME: DE995SB07 DE995SEW02
DESCRIPTION: SCHEMATIC OF CRT MONITOR
Checked
Eric.Day
03-16-2001
Approved
TOM.WANG
03-16-2001
PART NO.
DE-995 SB 07
DE-995 SEW 02
REV.
04
SHEET
9 TO END
Frame Name:FR9-2R00.SCH
X601
IC601
LM2435T

E95-1

TEST CONDITION :

AC SOURCE : 110V ; TIMING MODE ; 60KHZ ; PATTERN ; FULL WHITE

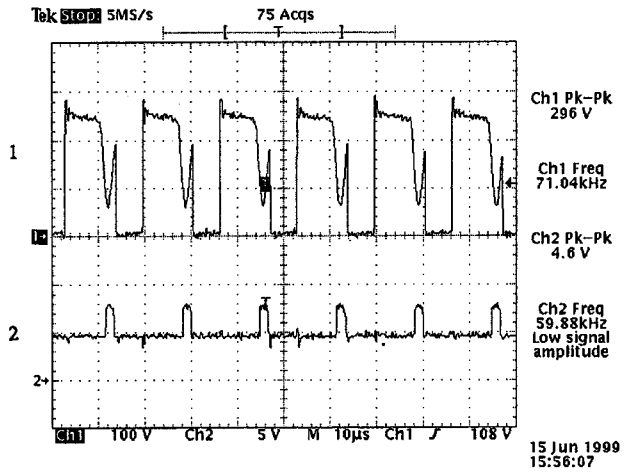

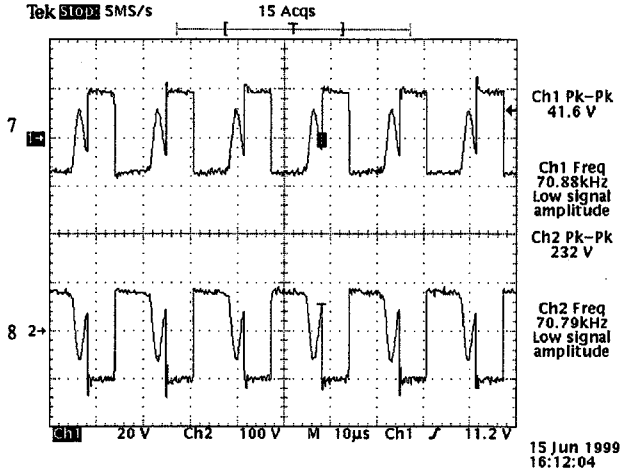

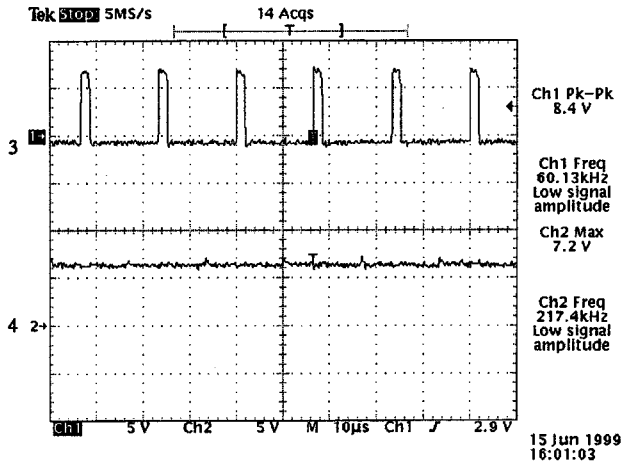

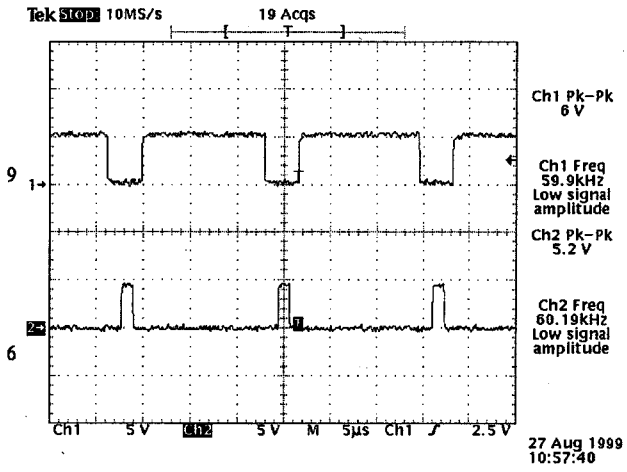

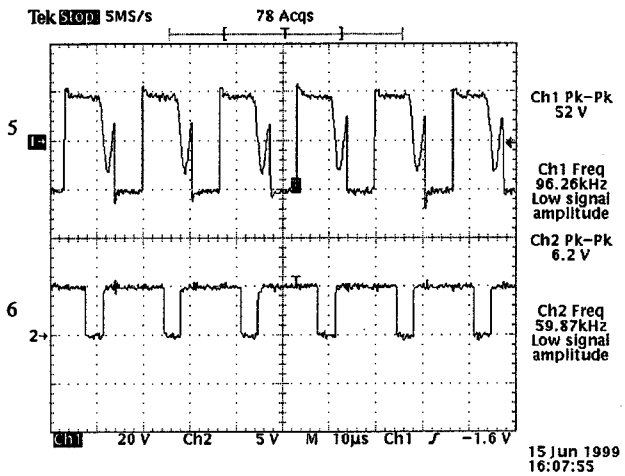

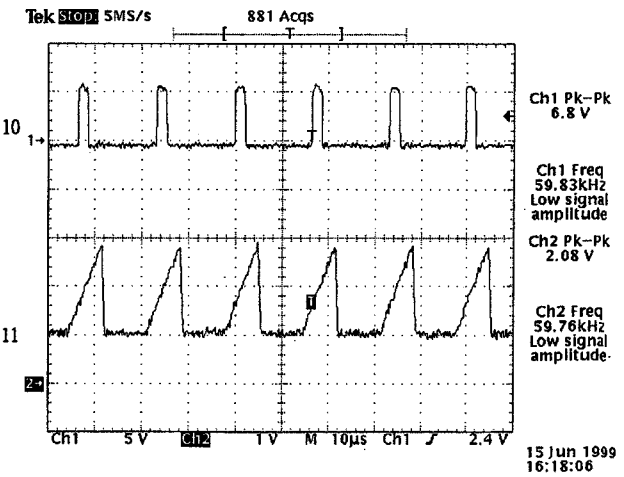

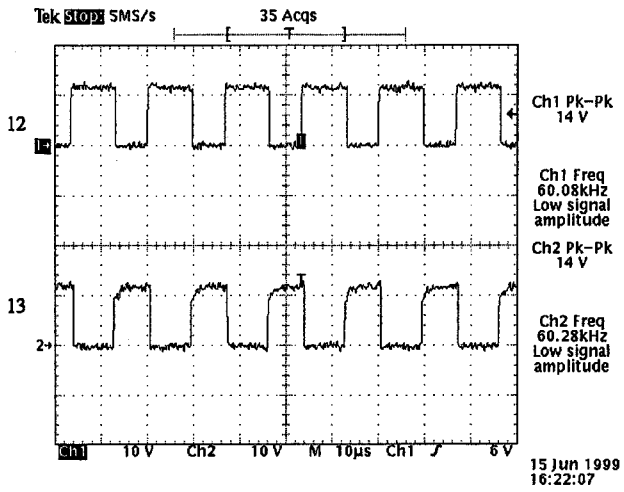
Tek Stop: 5MS/s 35 Acqs
12
13
Ch1 Pk-Pk 14 V
Ch1 Freq 60.08kHz Low signal amplitude
Ch2 Pk-Pk 14 V
Ch2 Freq 60.28kHz Low signal amplitude
Ch1 10 V Ch2 10 V M 10µs Ch1 ƒ 6 V
15 Jun 1999 16:22:07

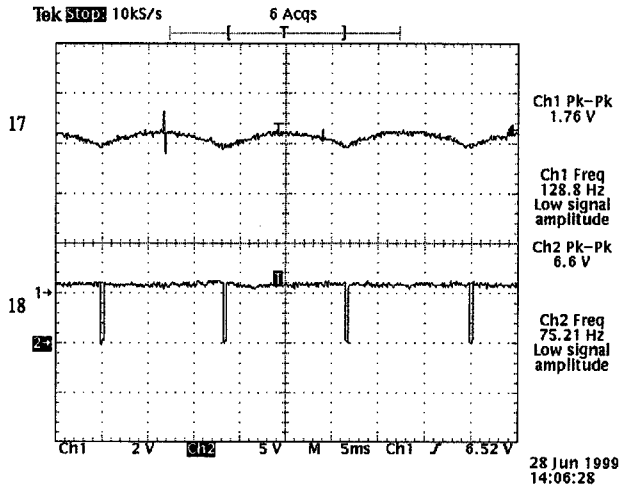
Tek Stop: 10kS/s 6 Acqs
17
18
Ch1 Pk-Pk 1.76 V
Ch1 Freq 128.8 Hz Low signal amplitude
Ch2 Pk-Pk 6.6 V
Ch2 Freq 75.21 Hz Low signal amplitude
Ch1 2 V Ch2 5 V M 5ms Ch1 ƒ 6.52 V
28 Jun 1999 14:06:28

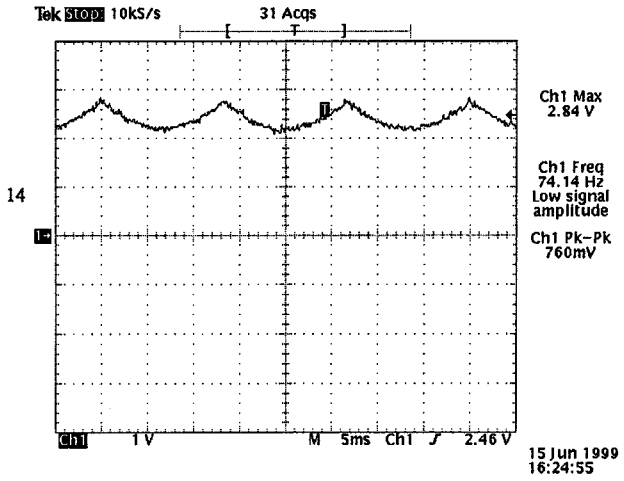
Tek Stop: 10kS/s 31 Acqs
14
Ch1 Max 2.84 V
Ch1 Freq 74.14 Hz Low signal amplitude
Ch1 Pk-Pk 760mV
Ch1 1 V M 5ms Ch1 ƒ 2.46 V
15 Jun 1999 16:24:55

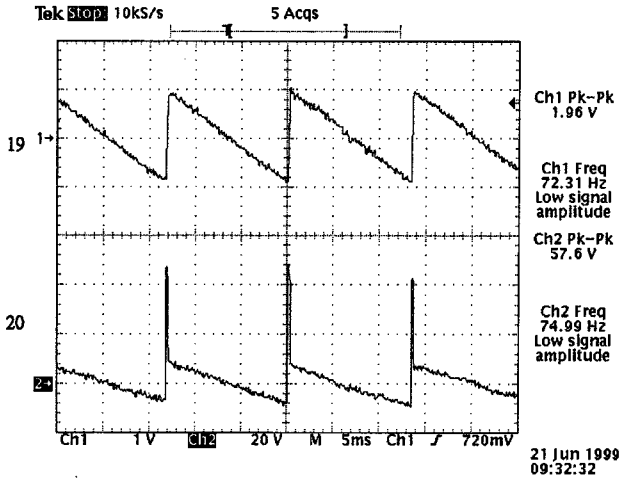
Tek Stop: 10kS/s 5 Acqs
19
20
Ch1 Pk-Pk 1.96 V
Ch1 Freq 72.31 Hz Low signal amplitude
Ch2 Pk-Pk 57.6 V
Ch2 Freq 74.99 Hz Low signal amplitude
Ch1 1 V Ch2 20 V M 5ms Ch1 ƒ 720mV
21 Jun 1999 09:32:32

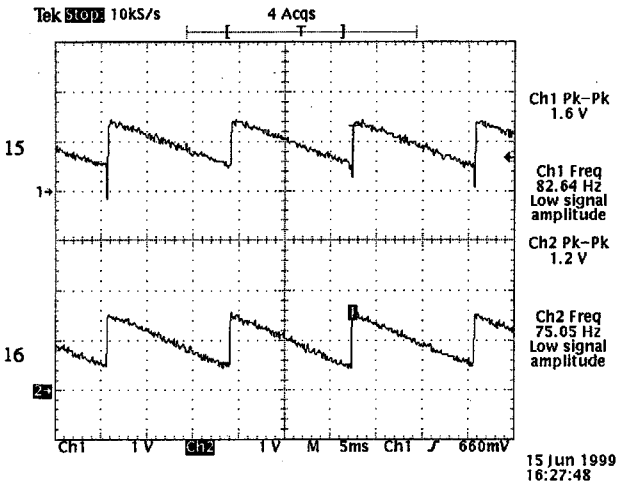
Tek Stop: 10kS/s 4 Acqs
15
16
Ch1 Pk-Pk 1.6 V
Ch1 Freq 82.64 Hz Low signal amplitude
Ch2 Pk-Pk 1.2 V
Ch2 Freq 75.05 Hz Low signal amplitude
Ch1 1 V Ch2 1 V M 5ms Ch1 ƒ 660mV
15 Jun 1999 16:27:48

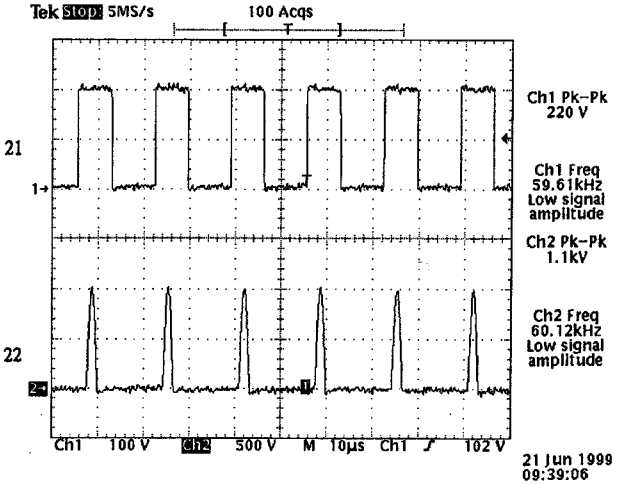
Tek Stop: 5MS/s 100 Acqs
21
22
Ch1 Pk-Pk 220 V
Ch1 Freq 59.61kHz Low signal amplitude
Ch2 Pk-Pk 1.1kV
Ch2 Freq 60.12kHz Low signal amplitude
Ch1 100 V Ch2 500 V M 10µs Ch1 ƒ 102 V
21 Jun 1999 09:39:06

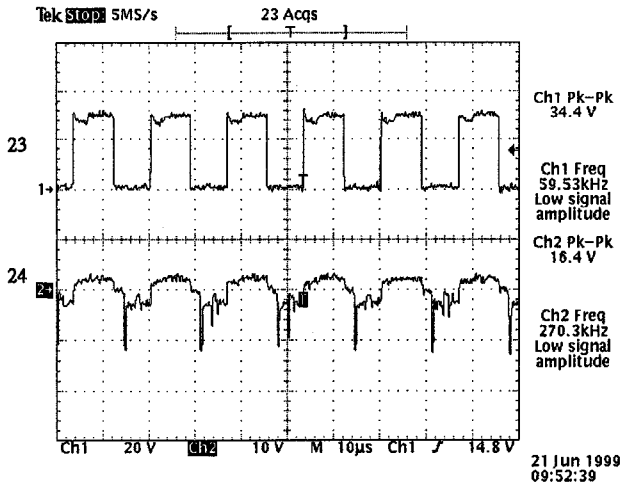
Tek STOP: 5MS/s
23 Acqs
23
24
Ch1 Pk-Pk
34.4 V
Ch1 Freq
59.53kHz
Low signal
amplitude
Ch2 Pk-Pk
16.4 V
Ch2 Freq
270.3kHz
Low signal
amplitude
Ch1 20 V Ch2 10 V M 10µs Ch1 14.8 V
21 Jun 1999
09:52:39

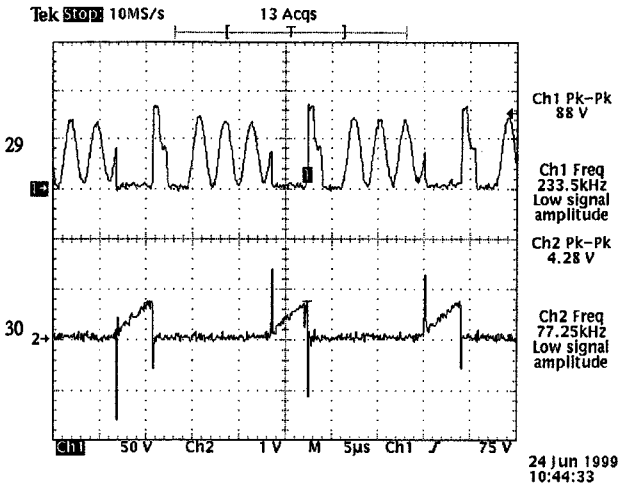
Tek STOP: 10MS/s
13 Acqs
29
30
Ch1 Pk-Pk
88 V
Ch1 Freq
233.5kHz
Low signal
amplitude
Ch2 Pk-Pk
4.28 V
Ch2 Freq
77.25kHz
Low signal
amplitude
Ch1 50 V Ch2 1 V M 5µs Ch1 75 V
24 Jun 1999
10:44:33

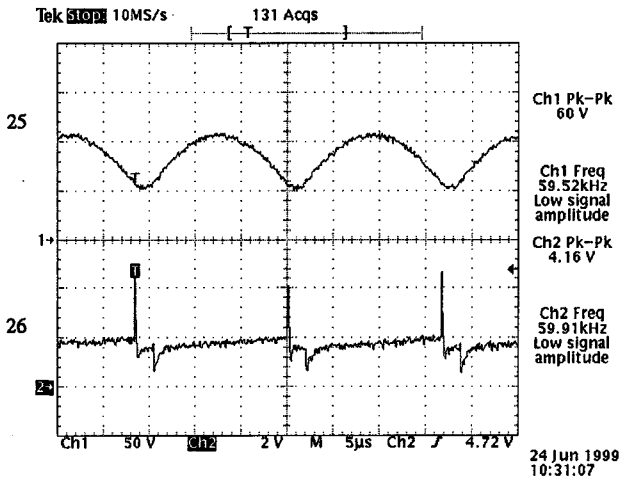
Tek STOP: 10MS/s
131 Acqs
25
26
Ch1 Pk-Pk
60 V
Ch1 Freq
59.52kHz
Low signal
amplitude
Ch2 Pk-Pk
4.16 V
Ch2 Freq
59.91kHz
Low signal
amplitude
Ch1 50 V Ch2 2 V M 5µs Ch2 4.72 V
24 Jun 1999
10:31:07

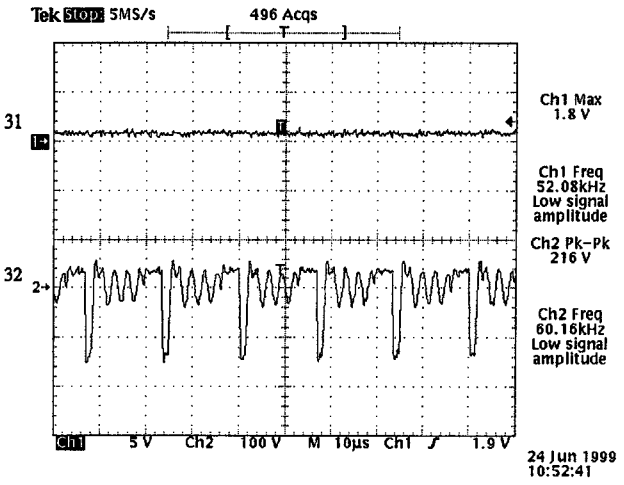
Tek STOP: 5MS/s
496 Acqs
31
32
Ch1 Max
1.8 V
Ch1 Freq
52.08kHz
Low signal
amplitude
Ch2 Pk-Pk
216 V
Ch2 Freq
60.16kHz
Low signal
amplitude
Ch1 5 V Ch2 100 V M 10µs Ch1 1.9 V
24 Jun 1999
10:52:41

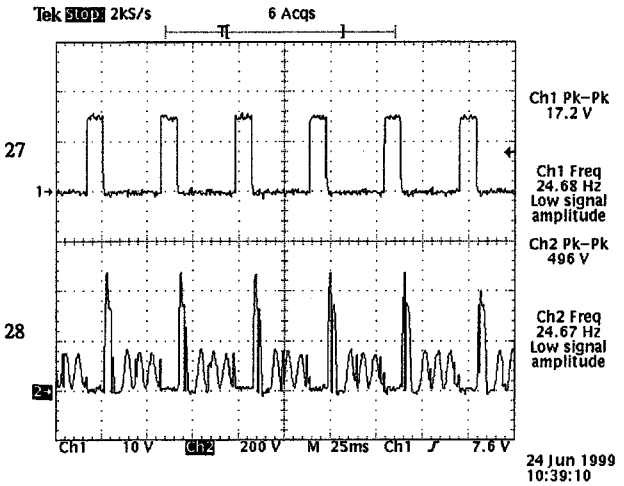
Tek STOP: 2kS/s
6 Acqs
27
28
Ch1 Pk-Pk
17.2 V
Ch1 Freq
24.68 Hz
Low signal
amplitude
Ch2 Pk-Pk
496 V
Ch2 Freq
24.67 Hz
Low signal
amplitude
Ch1 10 V Ch2 200 V M 25ms Ch1 7.6 V
24 Jun 1999
10:39:10

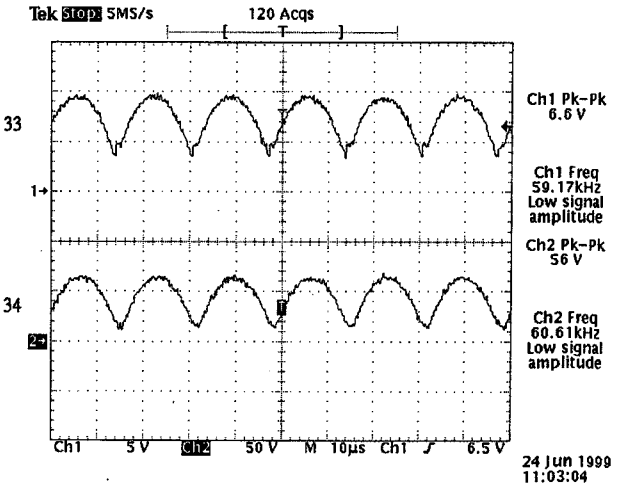
Tek STOP: 5MS/s
120 Acqs
33
34
Ch1 Pk-Pk
6.6 V
Ch1 Freq
59.17kHz
Low signal
amplitude
Ch2 Pk-Pk
56 V
Ch2 Freq
60.61kHz
Low signal
amplitude
Ch1 5 V Ch2 50 V M 10µs Ch1 6.5 V
24 Jun 1999
11:03:04

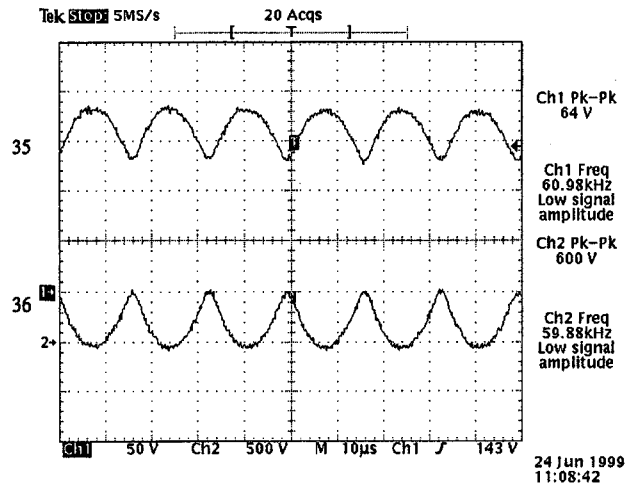
Tek Stop: 5MS/s
20 Acqs
35
36
Ch1 Pk-Pk
64 V
Ch1 Freq
60.98kHz
Low signal
amplitude
Ch2 Pk-Pk
600 V
Ch2 Freq
59.88kHz
Low signal
amplitude
Ch1 50 V Ch2 500 V M 10µs Ch1 143 V
24 Jun 1999
11:08:42

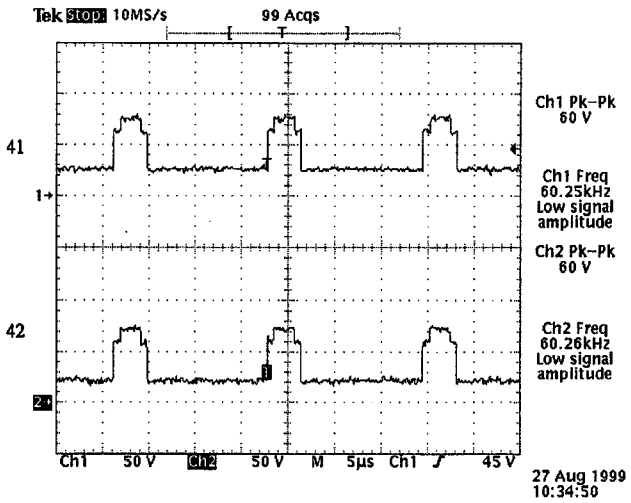
Tek Stop: 10MS/s
99 Acqs
41
42
Ch1 Pk-Pk
60 V
Ch1 Freq
60.25kHz
Low signal
amplitude
Ch2 Pk-Pk
60 V
Ch2 Freq
60.26kHz
Low signal
amplitude
Ch1 50 V Ch2 50 V M 5µs Ch1 45 V
27 Aug 1999
10:34:50

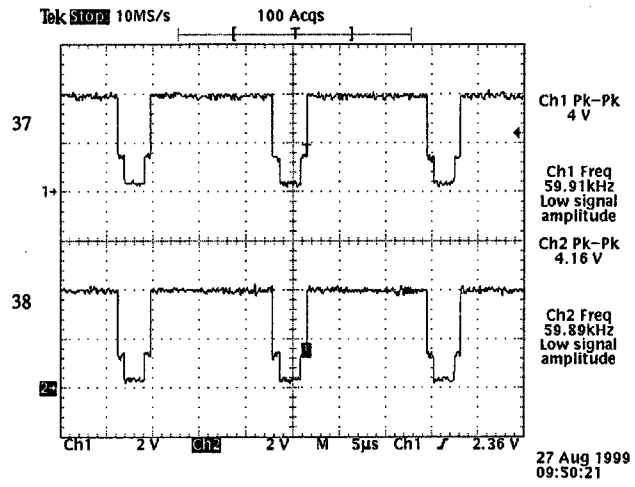
Tek Stop: 10MS/s
100 Acqs
37
38
Ch1 Pk-Pk
4 V
Ch1 Freq
59.91kHz
Low signal
amplitude
Ch2 Pk-Pk
4.16 V
Ch2 Freq
59.89kHz
Low signal
amplitude
Ch1 2 V Ch2 2 V M 5µs Ch1 2.36 V
27 Aug 1999
09:50:21

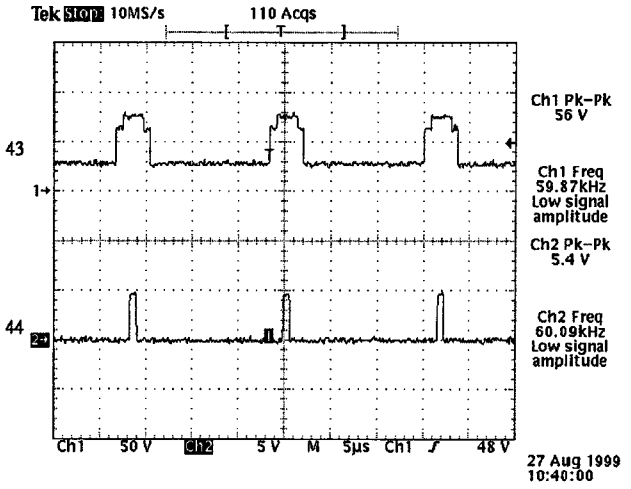
Tek Stop: 10MS/s
110 Acqs
43
44
Ch1 Pk-Pk
56 V
Ch1 Freq
59.87kHz
Low signal
amplitude
Ch2 Pk-Pk
5.4 V
Ch2 Freq
60.09kHz
Low signal
amplitude
Ch1 50 V Ch2 5 V M 5µs Ch1 48 V
27 Aug 1999
10:40:00

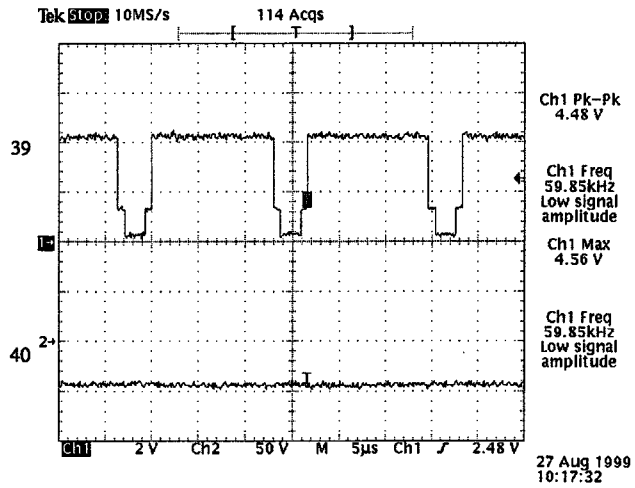
Tek Stop: 10MS/s
114 Acqs
39
40
Ch1 Pk-Pk
4.48 V
Ch1 Freq
59.85kHz
Low signal
amplitude
Ch1 Max
4.56 V
Ch1 Freq
59.85kHz
Low signal
amplitude
Ch1 2 V Ch2 50 V M 5µs Ch1 2.48 V
27 Aug 1999
10:17:32

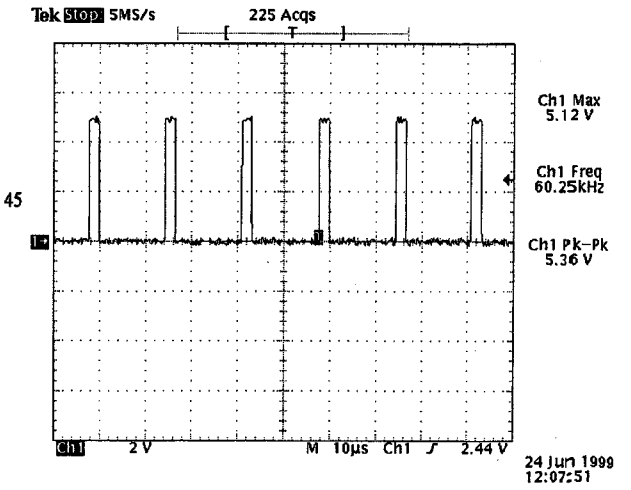
Tek Stop: 5MS/s
225 Acqs
45
Ch1 Max
5.12 V
Ch1 Freq
60.25kHz
Ch1 Pk-Pk
5.36 V
Ch1 2 V M 10µs Ch1 2.44 V
24 Jun 1999
12:07:51

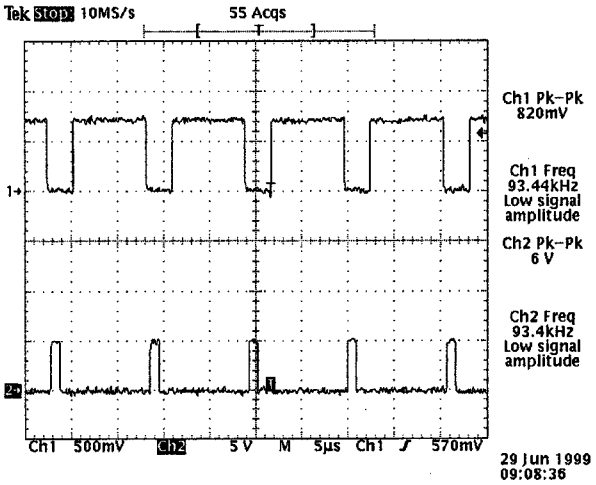
Tek STOP: 10MS/s
55 Acqs
Ch1 Pk-Pk
820mV
Ch1 Freq
93.44kHz
Low signal
amplitude
Ch2 Pk-Pk
6 V
Ch2 Freq
93.4kHz
Low signal
amplitude
Ch1 500mV
Ch2
5 V
M
5µs
Ch1
570mV
29 Jun 1999
09:08:36

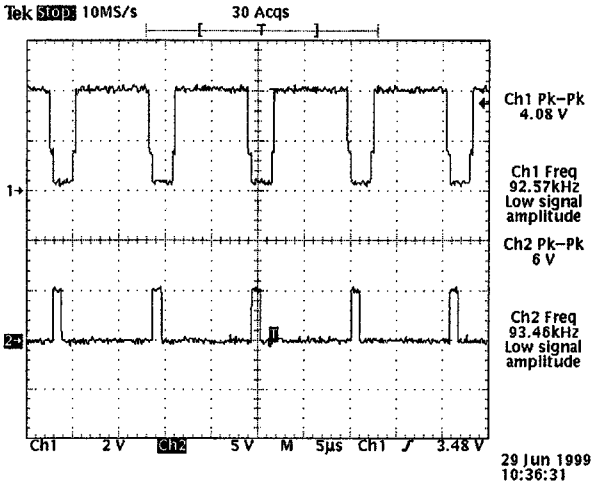
Tek STOP: 10MS/s
30 Acqs
Ch1 Pk-Pk
4.08 V
Ch1 Freq
92.57kHz
Low signal
amplitude
Ch2 Pk-Pk
6 V
Ch2 Freq
93.46kHz
Low signal
amplitude
Ch1
2 V
Ch2
5 V
M
5µs
Ch1
3.48 V
29 Jun 1999
10:36:31

4. Circuit description

4.1 Power supply (switching power supply)

4.2 Power saving

4.3 Micro-controller unit

4.4 Sync Processor

4.5 Deflection
- 4.5.1 Horizontal synchronization processing
- 4.5.2 Horizontal Driver stage
- 4.5.3 Horizontal scanning and high voltage power supply circuit
- 4.5.4 Buck converter and width control
- 4.5.5 The Pincushion /Trapezoid/Top Hook/Bottom Hook correction
- 4.5.6 Parallel/Pin-balance Control
- 4.5.7 X-Ray-radiation protection
- 4.5.8 Vertical Deflection
- 4.5.9 Focus
- 4.5.10 Tilt

4.6 Video
- 4.6.1 Video amplifier
- 4.6.2 On screen Display (OSD)
- 4.6.3 Auto Beam Limit CKT (A,B,L,CKT)
- 4.6.4 Brightness control
- 4.6.5 Blanking CKT
- 4.6.6 Contrast, gain & Bias control
- 4.6.7 DDC 1/2B

Confidential - Do Not Copy

4. CIRCUIT DESCRIPTION

4.1 POWER SUPPLY (switching mode power supply fly-back type)(IC101)

The raw DC B+ voltage is got from AC input voltage after CR101 rectifier. It supplies lower voltage VCC to PWM controller, IC101 (KA2S1265), through start-up circuit (R104, R120, ZD101, Q102, D113). IC101 is synchronous by T103/Q105/Q109/C110 switching frequency. In order to meet E2000 power consumption specification, during power off mode, IC102 is turned off and Q116 is turned on. It can pull low IC101 pin4 feedback signal to forced power supply shut down. High-frequency & High-Voltage square wave-form is across the primary winding and transfers energy to the secondary. The output DC voltage gets after rectifying and filtering.

In order to have a stable and regulated output voltage while AC input voltage and output load change. IC203 will produce a current change through IC104 couple a voltage change on IC101 pin4. PWM controller circuit will change duty cycle and maintain stable voltage.

The PWM controller IC101 is started up from the raw B^+. The lower voltage VCC is provided by T101's AUX-Winding (pin1) through R151, D105, C108, SW101 to IC101 pin3.

The 198V in TP201 can be determinate by R211,R212,R223, VR201
(Vo=2.5 * (R211 + R212 / VR201 + R223).

Degauss CKT: When the power is turn on or press manual degauss let IC303 pin13 will high to turn on Q209 and RL201, degauss will active about 4 second.

Confidential - Do Not Copy

4.2 POWER SAVING

According to E2000 agreement with monitor manufacturer is as the following table:

SYNC. INPUT	H. & V. PRESENTED	NO H. OR V.	NO H. AND V.
MODE TTL SIGNAL	NORMAL ON	STAND-BY SUSPEND	POWER OFF
SW1	Hi	Lo	Lo
SW2	Hi	Hi	Lo
LED	Green	Amber	Amber
Power (Watt)	Normal	< 15W	< 3W

SW1: IC301 pin24, suspend (SUS)
SW2: IC301 pin23, power down (PD)

- The suspend mode occurs when SW1 is at low level.
  The 15V, 12V, -15V are switch off via Q201 Q202 / Q205 Q206.

- The power-off mode occurs when SW1 and SW2 are at low level.
  The switchine power is turn off and all output are at low output.

- The micro-processor IC301 are drived to power off mode when signal cable is not connected to PC.

4.3 MICRO-CONTROLLER UNIT (MCU) (IC301)

IC301 is a 8-bit micro-controller (D1678P40) with 16K byte ROM memory, which play a main role of the digital control monitor. It performs as mode timing detector, key control scanner and controller, DPMS power saving handling, on screen display programmer and auto-alignment geometry controller pin16/17 are for key control. Pin1/40/39 are for s-correction switch control.by IC303 Pin8/9 are for Horizontal and Vertical sync. input respectively. Pin6/7 is the V-sync. and horizontal-sync output to pin14/15 of IC401. Pin39/38 are serial clock and serial data (SCL/SDA) bus communicate with IC302 (EEPROM) pin6/5. Pin16(DSDA)/17 (DSCL) are as a port to communicate with DDC 1/2B access and auto alignment port. by signal cable. Pin21 (U-SDA) / 22(U-SCL) / 20(U-INT) are USB bus.

Confidential - Do Not Copy

4.4 SYNC. PROCESSOR

The horizontal sync. is connected from signal cable to IC301(MCU) pin8 input and from IC301 pin7 output positive polarity sync to IC401 pin15.

Vertical sync. is connector from signal cable to IC301(MCU) pin9 input comes out at pin6 a positive polarity sync to IC401 pin14.

The IC301 and the IC401 (TDA4856) sync input can handle either composite or separate sync input.

4.5 DEFLECTION CIRCUIT

4.5.1 Horizontal Synchronization Processing

The horizontal synchronization processor is integrated inside the chip of IC401. It uses a dual phase-lock-loop (PLL1/PLL2) design. This operation ensures a smooth tuning and avoids fast changes of H-frequency during catching.

The processor can synchronize with the input sync. up to triple of free-run frequency which is determined by R408, R409 and C407.

The PLL1 phase detector circuit is used to control the oscillator frequency and maintains it in proper frequency and phase with the incoming sync signal. One input is coupled from output of VCO that is built inside the IC.

A loop filter with a properly selected time constant (C406, R407) is connected at pin26.

The PLL2 circuit is used to compare the line flyback pulse at pin HFLB with the oscillator sawtooth voltage, to compensate the delay in H-deflection by adjusting the PHASE of HDRV. One input is from the output of VCO (which is inside the IC) and a second input (pin1 of IC 401) is from Q415 collector pulse via C483, C484.

The control voltage formed through loop filter is to control horizontal output pulse output at proper duty cycle and maintains the phase between raster and picture.

4.5.2 Horizontal Driver Stage

The horizontal drive pulse from pin8 of IC401 is applied to the base of driver MOSFET Q4125. B^+ is provided by the regulated 15V-voltage source via R446, R446 and C424. The output of driver transformer T401 is coupled to the base of Horizontal output Transistor Q415. R441 C442 compose of damping network, which is to eliminate the leakage flux of T401 during Q412turn off.

Confidential - Do Not Copy

4.5.3 Horizontal Scanning and High Voltage Power Supply Circuit

The horizontal scanning is accomplished by Q415, D410, C428, and DY (P401). Except the basic horizontal scan output, Linearity coil T403 corrects the asymmetrical distortion. (C427/C432/C434/C435/C436/C437/C438) are S-Correction capacitors, Q420/Q421/Q422/Q423/Q424 switched on/off according to different H-frequency.

The conducting period of damper diode D410 completes the first half part of horizontal scan. The conducting period of horizontal output transistor Q415 completes the second half of scan.

The retrace capacitor is C428, the charge and discharge actions of retrace capacitor via yoke after Q415 turned off, which is designed for the same resonant frequency with the main scan circuit.

In the high voltage drive circuit, the output of Q401 is applied to the primary winding of flyback transformer (FBT) T401 and drives the flyback transformer to supply CRT anode voltage of about 25.8KV during retrace period. T402 pin6 voltage (B+) steps down by IC402, Q402. Feedback components are C416, R425 and VR402.

Several driven power sources are developed in the FBT secondary, including
40Vp-p: XPR pulse (pin10), -130Vp-p: G1 negative pulse (pin4), 400Vp-p: V Focus VCC (pin3).

4.5.4 Buck Converter and width control

In order to maintain same scan width (raster) within 30KHz-95KHz or 30KHz-86KHz, the scan supply B+ tracked with continuos H-frequency is necessary, and the design is implemented by a convention method-of buck converter. The buck converter mainly composes of a P-channel MOSFET (Q408), choke T402 and rectifier diode D409.

The PWM control circuit is integrated in IC401 pin5 is inverting, pin3 is output of error amplifier, both for frequency compensation and gain setting. PWM pulse width output at pin6 is modulated according to internal error amplifier output. Pin4 current sense is controlled by Q403, R431, ZD401 and R432 for horizontal size width limitation.

4.5.5 The Pincushion/Trapezoid/Top Hook/Bottom Hook Correction

The voltage across R418 can be varied in accordance with a vertical parabolic or sawtooth waveform, which is generated by IC401 pin11. The peak yoke current is decreased in proportion to the feedback of R418, as the voltage across R418 is changed for compensating the pincushion, trapezoid and Hook effect. The waveform is adjusted by IC301 SCL SDA control IC401 pin18 pin 19.

ViewSonic Corporation

Confidential - Do Not Copy

4.5.6 PARALLEL and PIN-BALANCE CONTROL

Parallel CKT is superimposed the vertical sawtooth current inside of IC401 the waveform amplitude is adjust by IC301 SCL SDA control IC401 pin18 pin 19.

Pin-balance CKT is superimposed the vertical parabolic current inside of IC401 the waveform amplitude is adjusted by IC301.

4.5.7 X-RAY-RADIATION PROTECTION

The X-Ray-radiation protection circuit usually uses in the monitor latching type circuit. Therefore, should a fault occur which would activate the X-ray protect circuit, Should a fault occur which would cause the high voltage to increase above a predetermined level, the positive pulse at pin7 of the FBT (T404) would go more positive. This will increase the voltage applied to ZD405 to exceed its breakdown voltage for a certain time. An latch circuit Q434 Q435 switches the IC404 pin1 into protection mode. Shutting down the IC404 and Q437.

NOTE: The X-RAY-Radiation protection circuit used in this monitor is a latching type the monitor will shut down and continue until turn-off the monitor by power switch.

4.5.8 Vertical Deflection (IC501)

Vertical deflection function is operated in the IC401, IC501 that mainly contains the oscillator, ramp generator, and power output amplifier and flyback generator. Vertical oscillator is obtained amplifier by means of and integrator driven by oscillation circuit that is determined by C402, C403 and R406. The vertical sync signal is applied to the pin14 of IC401. Once the sync signal synchronized a clock pulse is generated inside this chip. The clock pulse is just as a sync input of ramp generator. A liner voltage ramp is produced at pin12,13 of IC401, and is couple to IC501 pin1,7 for vertical output amplitude Vertical output amplitude is controlled by R502/R505, IC401 inside parameter and IC301 Vert. size DAC.

The CKT of the TDA8172 provides a high CMRR current driven differential input (pin1,7), the output stages (pin3,5) in a full bridge configuration, a flyback generator, a protection CKT for the output stage and a guard CKT.

The pin5 is the output of the power amplifier and it drives the yoke by a current driven in opposite phase current ramp. Pin2 is the supply voltage 15VDC, Pin4 is supply voltage –15VDC, the pin3 is the feedback pulse feedback to pin6.

Vertical frequency is 100~180Hz, Q401 off so vertical free run is only determined by C402. If vertical frequency is 50~100Hz, Q401 on so vertical free run is determined by C402 + C403. Total vertical frequency range is from 50Hz to 180Hz.

Vertical centering is controlled by changing the DC voltage at vertical output that is caused from the DC shift of IC401 pin13, and that can be adjusted by DAC control of IC301.

Confidential - Do Not Copy

4.5.9 FOCUS

Horizontal parabolic wave form the IC901 pin7 (M52723ASP) Sync trigger by the pin17 of IC901. IC901 pin7 is horizontal parabolic O/P to drive Q902, Q903 and Q904 via T405 pin7 coupling to FBT pin13. Vertical parabolic waveform is taken from Q904 via T405 pin1 to FBT pin13. IC901 pin6/pin15 can control IC901 pin7 amplitude/phase by IC301 pin32/pin31.

4.5.10 TILT

Tilt CKT is operated a current of different direction on rotation coil. The IC301 pin33 output 0~5V to IC701 pin2 to control the volt amplitude and polarity on IC701, IC701 pin1 output via Q701 Q702 to drive rotation coil.

4.6 VIDEO

4.6.1 VIDEO AMPLIFIER (IC601)

The video amplifier module is composed of three amplifiers for red, green, blue channel.

The video input signal is fed to the video preamplifier IC601 (M52743BSP) (pin2 blue, pin6 green, pin11 red) through AC coupling capacitor C603, C604, C658.

The clamping pulse comes from IC301 pin28 to IC601 pin19. The blanking pulse come from P602 pin9 (HBL) and P604 pin3(VBL) to IC601 pin27.

IC602 is an integrated high voltage CRT driver circuit designed to drive R.G.B channel of CRT

4.6.2 On Screen Display (OSD)(IC603)

IC603 (MTV021N-25) is a on screen display generator. Pin5 for H-sync input, pin10 for V-sync input. The IC603 is controlled by IC301 via P604 ISCL, ISDA to IC603 pin7, pin8.

The on screen display signal is output from pin12 (B), pin15(G), pin14(R), pin13(B)connected to mixer circuit of IC601 pin1, pini4, pin13, pin9.

4.6.3 Auto Beam Limit CKT (A. B. L. CKT)

When beam current over 870uA by VR401, the voltage build at base of Q601 will be less then 3.5V, then the voltage of pin15 of IC601 will be pulled down accordingly to reduce the video preamplifier gain output.

Confidential - Do Not Copy

ViewSonic Corporation

4.6.4 Brightness Control

Brightness (G1) is controlled by varying the DC voltage of VR601 and the IC601 pin23 (DAC) voltage.

4.6.5 Blanking CKT

From IC301 pin6 and IC501 pin6 vertical blanking pulse are fed to the base of Q501 and via P604 pin3. The blanking pulse O/P is coupled to horizontal blanking pulse by Q614. Horizontal & vertical blanking pulse are fed to IC601 pin27 and let video O/P Amp cut off during the period of horizontal retraces. While mode change. IC301 pin15 will pull high to turn on Q612 (mute function) and Q613 will be off. The G1 volt will down to -130V then CRT will cut off the video output.

4.6.6 CONTRAST, GAIN & BIAS CONTROL

The IC601 contains three gated single ended input black level clamp compurgators for brightness control, three matched DC controlled attenuators for contrast control, and three DC controlled sub-contrast attenuators providing gain trim capability for white balance.

All the DC control voltages are comes from IC601 internal (DAC) is controlled by IC301 Micro controller via a serial bus. The IC601 DAC output pin24, 25, 26 for G.R.B (BIAS) controller.

4.6.7 DDC1/2B

IC604 (24LC21) can transmit continuously it's extended identification, "EDID" using DDC1 communication channel. In addition, the monitor can respond to a regrets for EDID, or complete VDIF, to be transmitted using DDC2, level B commands. Pin6 (DSCL) is clock input for DDC 2B, pin5 (DSDA) for data input. Pin7 (V-sync) is clock input for DDC1 through V-sync.

In DDC1 data transfer (UNI-directional mode) the V sync input pin is used as input clock for data transmission and SDA output pin as serial data line the SCL pin will hold high.

The DDC2B mode (BI - directional mode), BUS consists of two wires SCL is for the data transmission clock and SDA is for the data link.

ViewSonic Corporation

Confidential - Do Not Copy

5. Adjusting procedure

A. General.

B. Instrument alignment.

1. Deflection presets.
2. Power supply alignment.
3. Size & geometry adjustment.
4. Video alignment / function memory recall.
5. Focus adjustment.

C. PCB defined.

D. Fixture function description.

Confidential - Do Not Copy

General

1. All specification must be met over line voltage range of 90VAC to 264VAC 50Hz/60Hz unless other wise specified.
2. Operating temperature range is 0 DEG.C to 40DEG. C with a relative humidity of 10% or less to 95%.
3. The monitor must be operational in an unstable state within 30 section after turn-on.
4. All signal levels are measured assuming termination at the monitor's input jacks or in its characteristic impedance.
5. An ambient lighting level of 400 to 600 LUX is assumed when setting brightness for raster extinction threshold.
6. All purity related specifications must be met without external degaussing.
7. All controls must have excess range (No control may be left at an end stop when proper alignment is completed).
8. The monitor is not required to meet specs during the following but must tolerate, without damage to the CRT or circuits, Any sequence or combination of power on and off, signal on and off, unplugging of power or signal, erratic, Wrong frequency of inputs while at any possible settings of user accessible controls noisy
9. An isolation transformer should be used when performing alignment and tests. Portions of the power supply board are hot ground The remaining boards are cold ground
10. Discharge of CRT anode should be done only to CRT ground strap.
11. Geometric measurement are assumed to be made alone a straight surface with a flat rule or template.

A. Instrument alignment

1. Deflection presets

1.1 Control pots (VR201, VR401, VR402, VR403) are set at middle point. screen VR set to MIN.

2. Power supply alignment

2.1 Input VESA 1024x768 / 75Hz mode & cross-hatch pattern.

2.2 Adjust VR201 until voltage at TP201=198V± 0.2V.

3. Extreme high voltage alignment

3.1 Input VESA640x480 31.5KHz/60Hz mode & cross-hatch pattern.

3.2 Contrast 100%, brightness 50%.

Adjust VR402 let H.V=26 ± 0.1KV (E95-1)

Adjust screen (G2 knob)let G2 = 540 ± 10VDC.(E95-1).

Set focus (G3 / G5 knob) to be distinguish.

Confidential - Do Not Copy

4. Horizontal alignment

4.1 Raster centering

4.1.1 Input test signal VESA 1024x768 / 75Hz mode & cross-hatch pattern.

4.1.2 Contrast 0%, Brightness 100%.

4.1.3 Press select the OSD to "RCENTER".

4.1.4 Adjust "RCENTER" ▲/▼ to center raster on screen such that the horizontal distance from the left display edge to the left bezel edge is within 3mm of the distance from the right display edge to the right bezel

4.1.5 Edge.

| L-R | ≦1mm

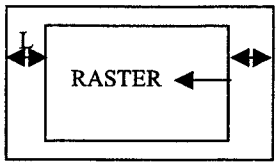

4.1.6 Change input test signal VGA 640x480 / 60HZ mode & cross-hatch pattern.

4.1.7 Select the OSD to "H-SIZE".

4.1.8 Adjust "H-SIZE" ▲/▼ to narrow the raster size on screen such that the horizontal distance at the right and left edge is within 5mm.

4.1.9 Adjust "RCENTER" ▲/▼ to center raster on screen such that the horizontal distance from the left display edge to the left bezel edge is within 3mm of the distance from the right display edge to the right bezel edge.

4.2 Picture centering

4.2.1 Input test signal VESA 1024x768 / 85Hz MODE & cross-hatch pattern.

4.2.2 Contrast 100%, Brightness 100%, cross-hatch pattern.

4.2.3 Adjust "H-PHASE" such that the picture is centered with the raster.

4.2.4 Adjust "H-SIZE" such that the picture size is 357mmX268mm.

4.3 Geometry distortion : PINCUSHION, PIN-BALANCE, TRAPEZOID, PARALLEL,TILT, TOP HOOK, BOTTOM HOOK.

4.3.1 Input test signal VESA 1024x768 / 85Hz mode & cross-hatch pattern.

4.3.2 Adjust " PINCUSHION " such that PINCUSHION / BARREL distortion of the nominal rectangle specified.

Confidential - Do Not Copy

4.3.3 Trapezoid / Parallelogram / TOP & Bottom hook / tilt adjustment.

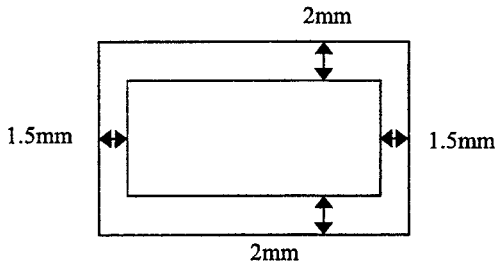

4.3.4 Geometry distortion must limit as above diagram.

4.4 Picture width

4.4.1 Input preset timing adjust,H-SIZE (OSD) to achieve 357 ± 4mm.

5. Vertical section adjustments.

5.1 Centering(with magnetic filed)

5.1.1 Apply signal at VESA 1024x768 / 75Hz mode, cross-hatch pattern.

5.1.1 Adjust "V-CENTER" to the video display vertically such that the vertical distance from the center of picture to the top bezel edge and the bottom bezel edge is within 3mm.

| L1-L2 | ≦1mm
| L3-L4 | ≦1mm

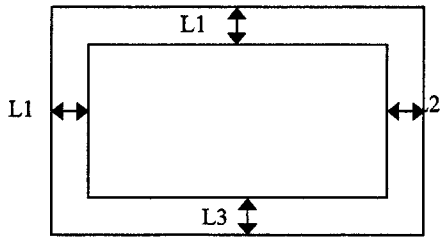

5.2 Vertical size

5.2.1 Apply preset timing cross-hatch pattern.

5.2.2 Adjust "V-SIZE" such that vertical height is 268mm±1mm.

6.0 Dynamic focus adjustment

6.1 Dynamic focus phase adjustment

6.1.1 Apply VESA1280x1024 80KHz / 75Hz mode full white pattern.

6.1.2 Connect oscilloscope across T404 pin13 on PCB-MAIN with GND Display size width: 357mm, height 268mm.

6.1.3 The OSD select FACTORY DEFLECTION to "FOCUSPHASE".

ViewSonic Corporation

Confidential - Do Not Copy

6.1.4 Adjust FOCUSPHASE to get horizontal parabolic waveform at center with video signal center by pressing adjust "▲" and "▼".

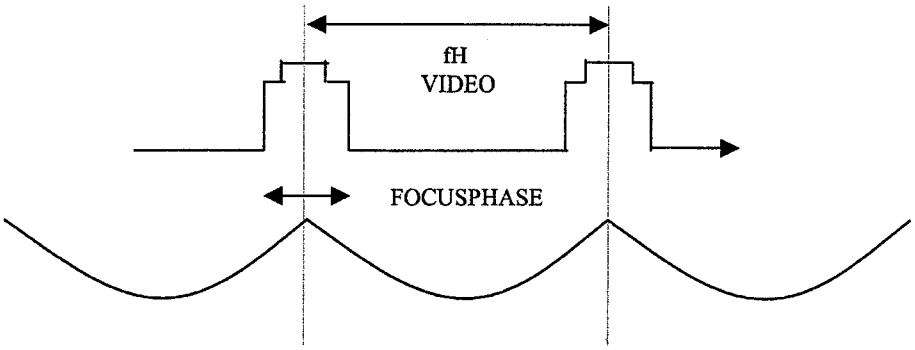

6.2 Dynamic focus parabolic waveform adjustment

6.2.1 Apply 30KHz / 50Hz, 95KHz / 150Hz timing display size width: 357mm, height: 268mm , H-FOCUS = 50% , V-FOCUS = 50%.

6.2.2 Input VGA 640x480 / 60Hz full white pattern

6.2.3 Select FACTORY PARAMETER to 31KHZ.

6.2.4 Adjust horizontal parabolic waveform to get 370 ± 10Vp-p by pressing adjust "▲" and "▼".

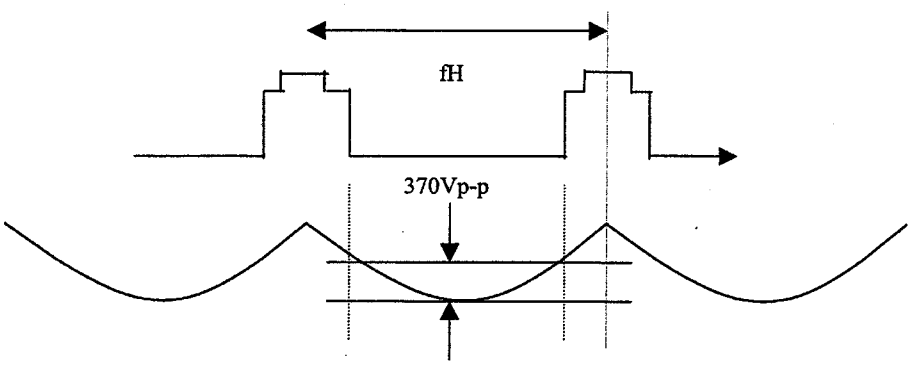

6.2.5 Input 30KHZ/ 50HZ full white pattern, select FACTORY PARAMETER to 50Hz.

6.2.6 Adjust vertical parabolic waveform to get 170Vp-p±5Vp-p by pressing adjust "▲" and "▼".

6.2.7 Input VESA 1600x1200/75Hz full white pattern.

6.2.8 The OSD select FACTORY PARAMETER to 95KHz.

6.2.9 Adjust horizontal parabolic waveform to get 370 ± 10Vp-p by pressing adjust "▲" and "▼".

6.2.10 Input 95KHz / 150Hz full white pattern, the OSD select FACTORY PARAMETER to 150Hz.

6.2.11 Adjust vertical parabolic waveform to get 170Vp-p ± 5Vp-p by pressing adjust "▲" and "▼".

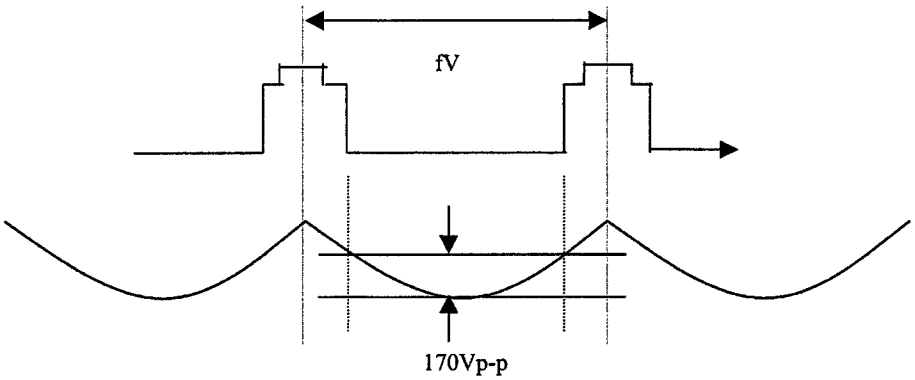

7. Focus adjustment

7.1 Set BRIGHTNESS at 50% AND CONTRAST at 100%.

7.2 Apply signal (all "ME" pattern) at VESA1024x768 / 75Hz mode.

7.3 Disconnect the RED and BLUE video input so as to produce a green only screen.

7.4 Set FOCUS CONTROL F1, F2 for best focus at midpoint of diagonal line from 10:00 corner to center of screen. F1 control for VERTICAL LINE; F2 control for HORIZONTAL LINE; individual; pixels should be distinguishable over entire display area.

8. Video preset condition

8.1 Apply VESA 1024x768 / 75Hz.

8.2 Display size width: 357 ± 4mm, height: 268 ± 4mm.

8.3 C ONTRAST 100

8.4 BRIGHTNESS "100"

8.5 RCUT, GCUT , BCUT "30"

8.6 RGAIN, GGAIN, BGAIN "200"

8.7 G1 "100" (Range 50 ~ 205)

9. Video alignment

9.1 Video cut off adjustment

9.1.1 Adjust VR601 to get the raster 0.2 ~ 0.4FLS (Center = 0.3FLS) (E95-1).

9.1.2 Adjust "RCUT", "GCUT", "BCUT" to get color coordination.
x=0.283±0.010 , y=0.297±0.010

9.1.3 Adjust "VR601" to get the raster Y=0.6 ± 0.2FLS (E95-1)

Confidential - Do Not Copy

9.1.4 Ensure that color coordination is x=0.283±0.010, y=0.297±0.010, if color coordination out specification, repeatedly item 9.1.1 ~ 9.1.3, until it meet specification.

9.1.5 Adjust R.G.B BIAS control to meet following chromatically spec.
9300°K→ x = 0.283±0.010 , y = 0.297±0.010 , Y = 0.6 ± 0.2FLS (E95-1)
6500°K→ x = 0.311±0.010 , y = 0.329±0.010
5000°K→ x = 0.346±0.010 , y = 0.359±0.010

9.2 Brightness and white balance adjustment

9.2.1 Set VESA 1024x768 / 75Hz window pattern, CONTRAST = 100% BRIGHTNESS = 50%.

9.2.2 Apply green white window pattern adjust G-DRIVER to obtain GREEN window pattern light output about Y = 30±2 FLS.

9.2.3 Apply white window pattern, adjust R-DRIVER, B-DRIVER to meet following chromatically spec. after G-DRIVER fixed.

9300°K → x = 0.283±0.010 , y = 0.297±0.010

9.2.4 Get Y = 40 ± 1 FLS

9.2.5 Apply GREEN white window pattern light output about (Y = 24 ± 2 FLS).

9.2.6 Apply white window pattern, adjust R-DRIVER, B-DRIVER following chromatically spec. after G- DRIVER fixed.

6500°K→ x = 0.313 ± 0.010 , y = 0.329 ± 0.010

9.2.7 Apply GREEN white window pattern, adjust G-DRIVER to obtain GREEN window pattern light O/P about (Y = 20±2 FLS).

9.2.8 Apply WHITE window pattern ,adjust R-DRIVER, B-DRIVER to meet following chromatically spec after G-DRIVER fixed.

5000°K→ x = 0.346±0.010 , y = 0.359±0.010

9.3 Apply full WHITE pattern, adjust VR403 to get Y = 30±2 FLS and check the chromatically meet following spec.

9300°K only for 1024x768 / 75Hz
| x (Y=MAX) – x (Y = 10) | < = 0.010
| y (Y=MAX) – y (Y = 10) | < = 0.010

Confidential - Do Not Copy

10. X-RAY adjustment/FACTORY MODE disable

10.1 X-RAY adjustment & check

10.1.1 Input 640X480 / 31.5Kz mode, cross-hatch pattern.

10.1.2 Set CONTRAST 100%, BRIGHTNESS 50%.

10.1.3 Use 47K 1% parallel with R4123 12K (P402).

10.1.4 Adjust VR401 let picture shut down.

10.1.5 Use 60K 1% parallel with R4123 12K 1% (P402) , the picture must be OK.

10.2 Factory mode enable/disable

10.2.1 Press "ENTER" key until push power knob on/off four times that can enable factory mode. If press "▲" key until push power knob one time that can disable factory mode.

10.2.2 Press "▼"key until push power knob four times, that can enable burning mode and can use fixture to adjust picture. If press r "MENU" key until push power knob one time, that can disable burning mode.

D. Fixture Function Description

1. Fixture adjust.

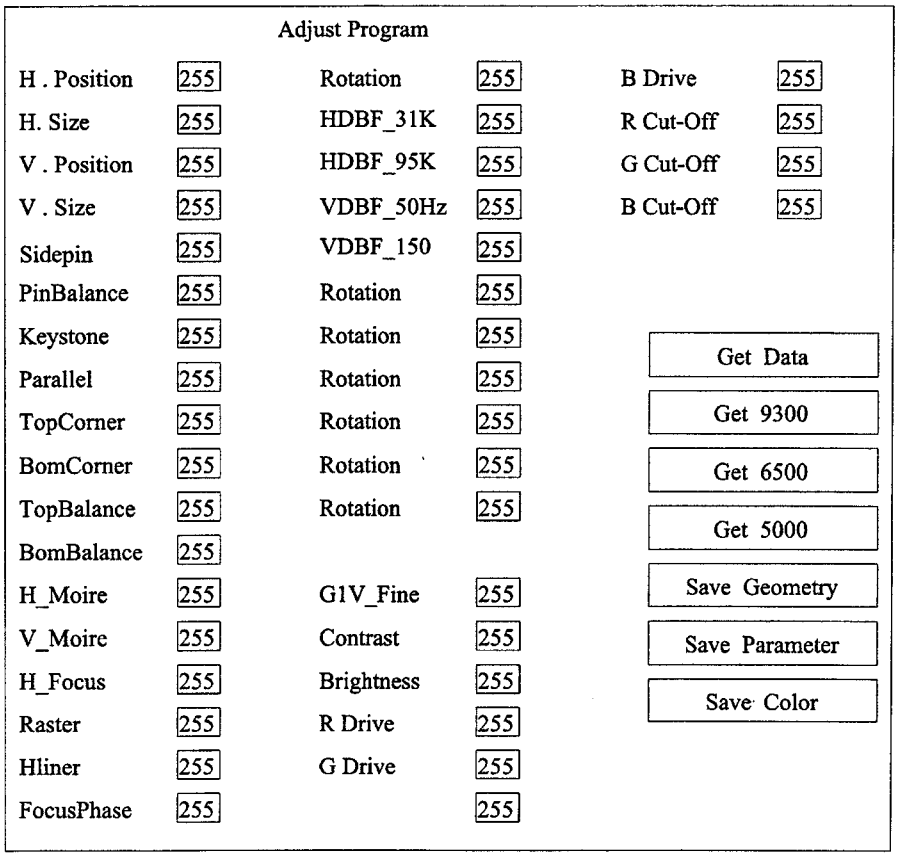

Confidential - Do Not Copy

2. Command define.

2.1 Loading initial data file : File -> Open -> select file -> open

2.2 Write initial data to monitor : Monitor -> write_eep .

2.3 Get data : Read E^2PROM data (one mode adjustment value).

2.4 Get 9300 : get color 9300K to adjust .

2.5 Get 6500 : get color 6500K to adjust ..

2.6 Get 5000 : get color 5000K to adjust .

2.7 Save color : save current color temperature data .

2.6 Save geometry : Save geometry adjustment data.

2.7 Save parameter : Save adjustment data to E^2PROM.

3. Fixture Connect.

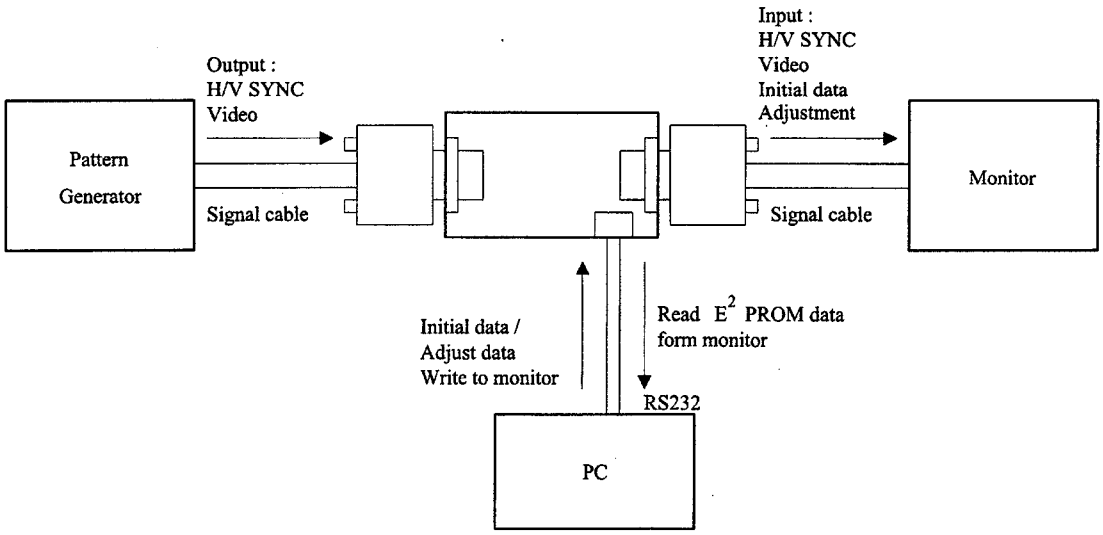

Confidential - Do Not Copy

6. Trouble shooting flow chart

1. **Power supply is defective**
2. **Horizontal deflection circuit is defective**
3. **The raster don't appear**
4. **Vertical deflection is defective**
5. **Video is defective**

Confidential - Do Not Copy

1. Power supply is defective

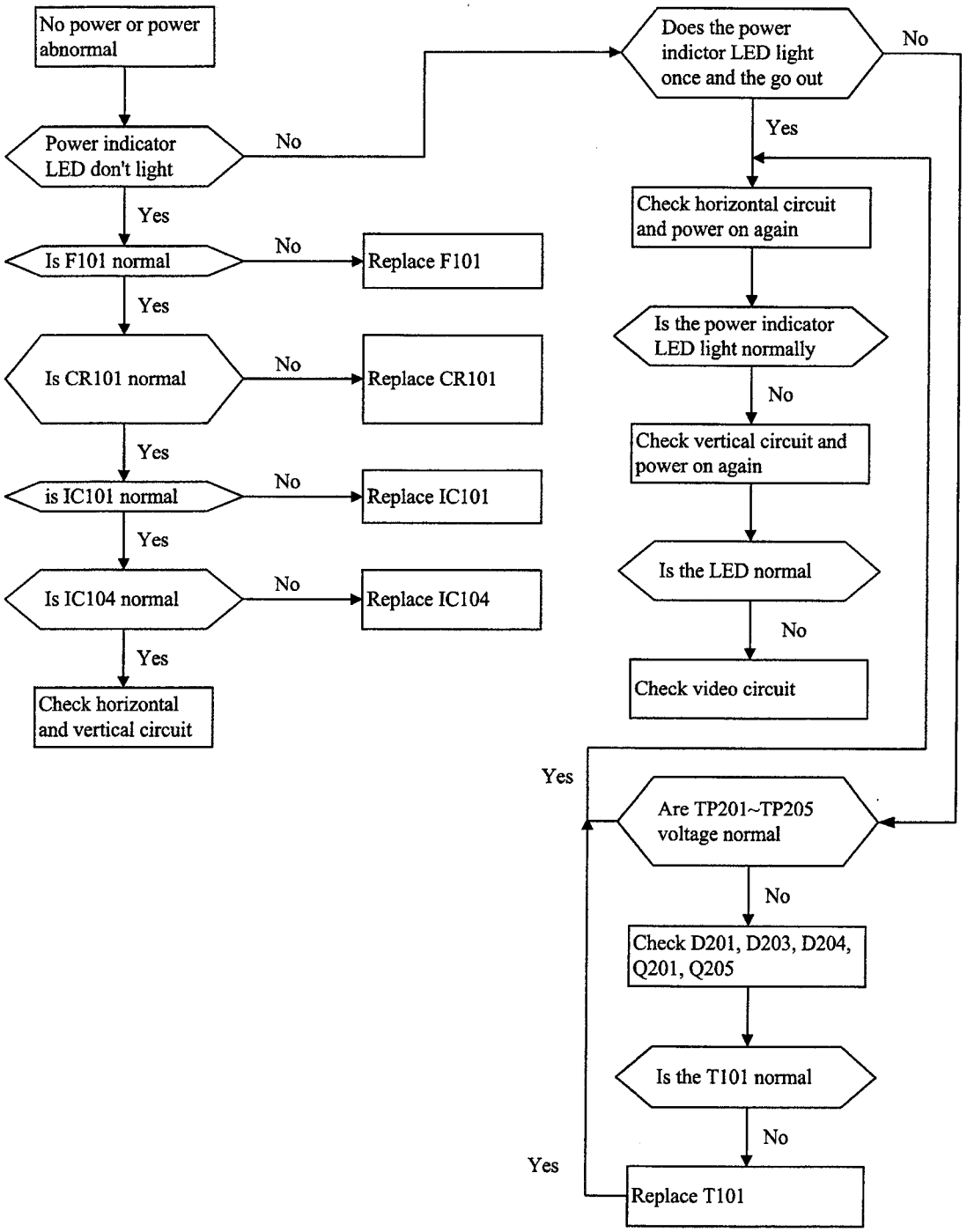

Confidential - Do Not Copy

2. Horizontal deflection circuit is defective

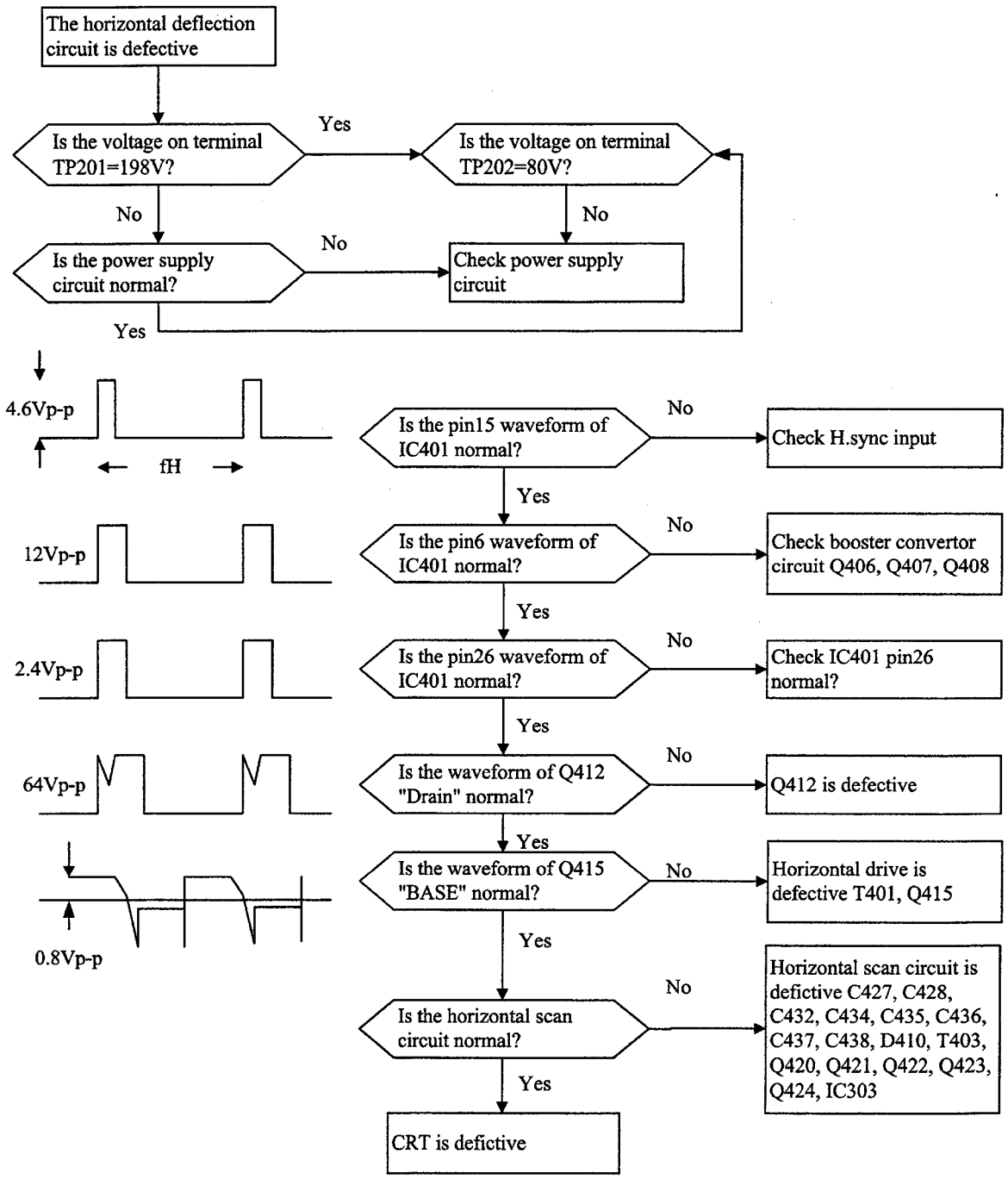

Confidential - Do Not Copy

3. The raster don't appear

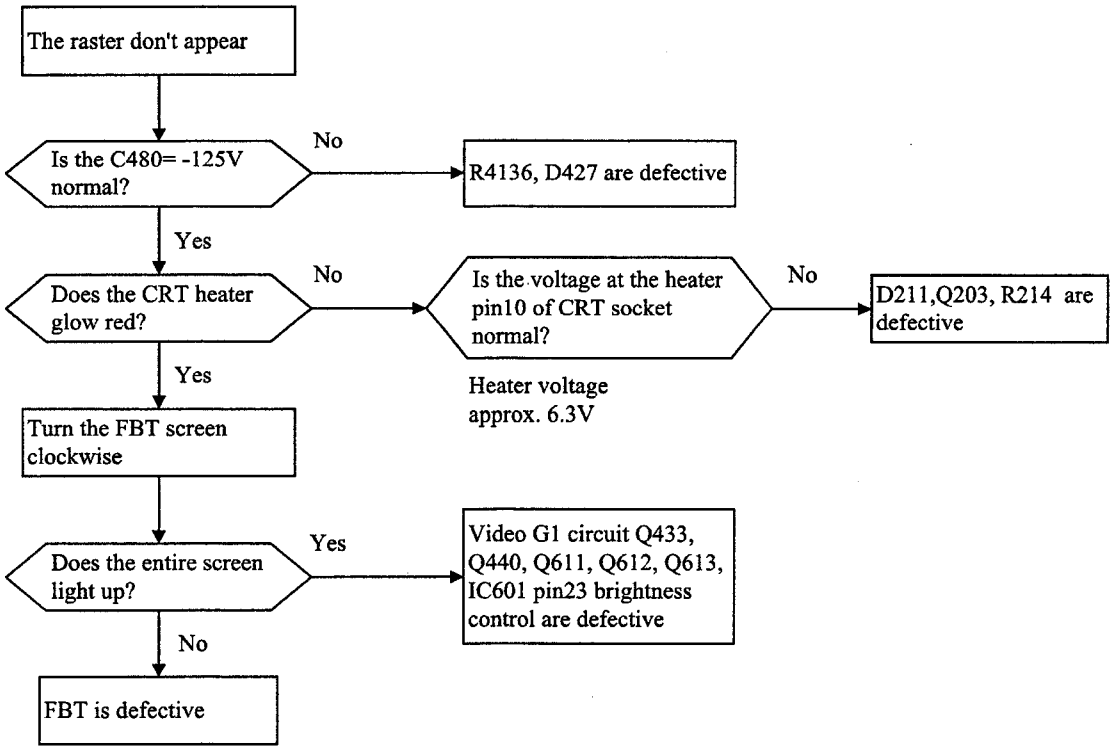

ViewSonic Corporation

Confidential - Do Not Copy

4. Vertical deflection is defective

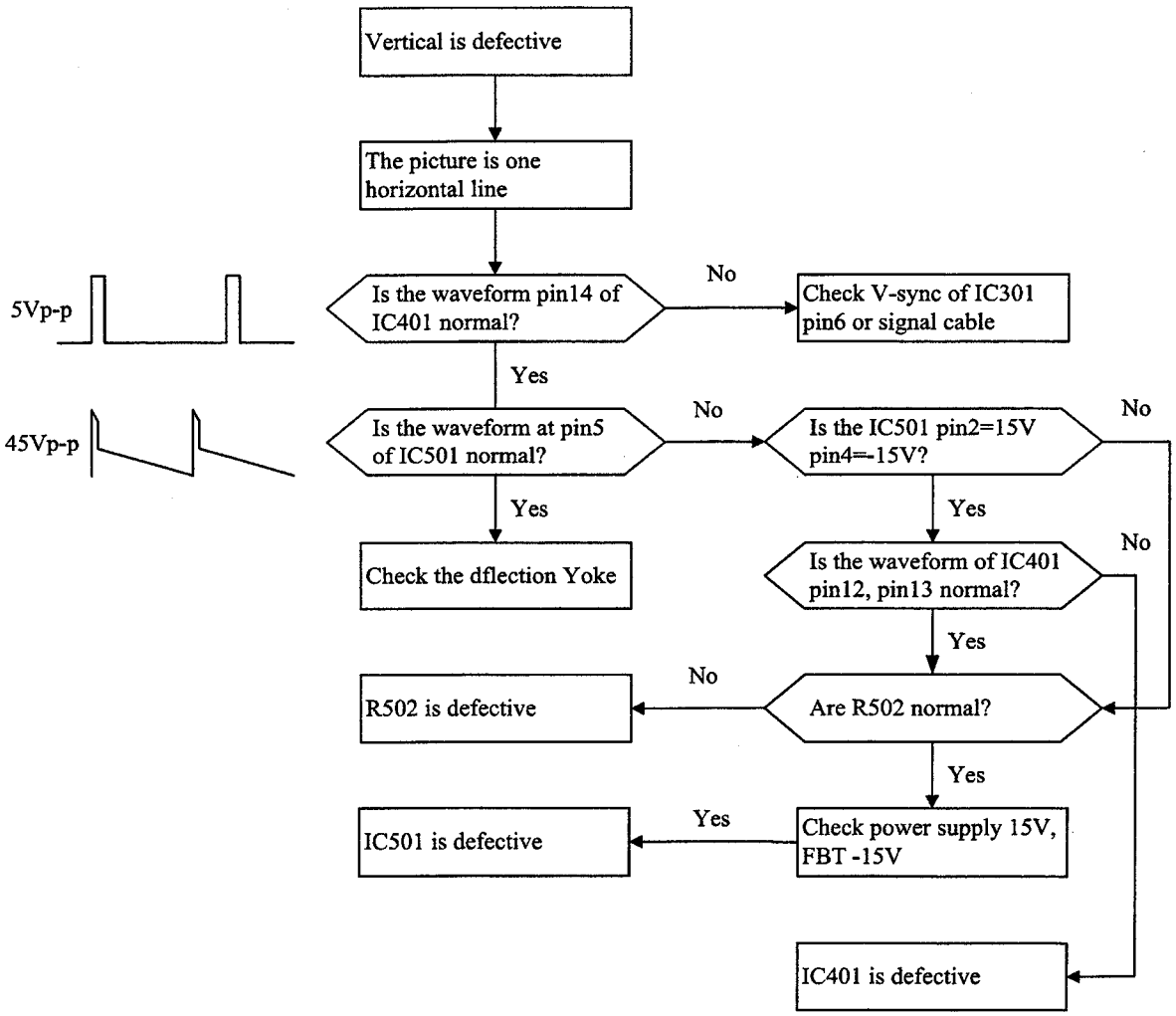

Confidential - Do Not Copy

5. Video is defective

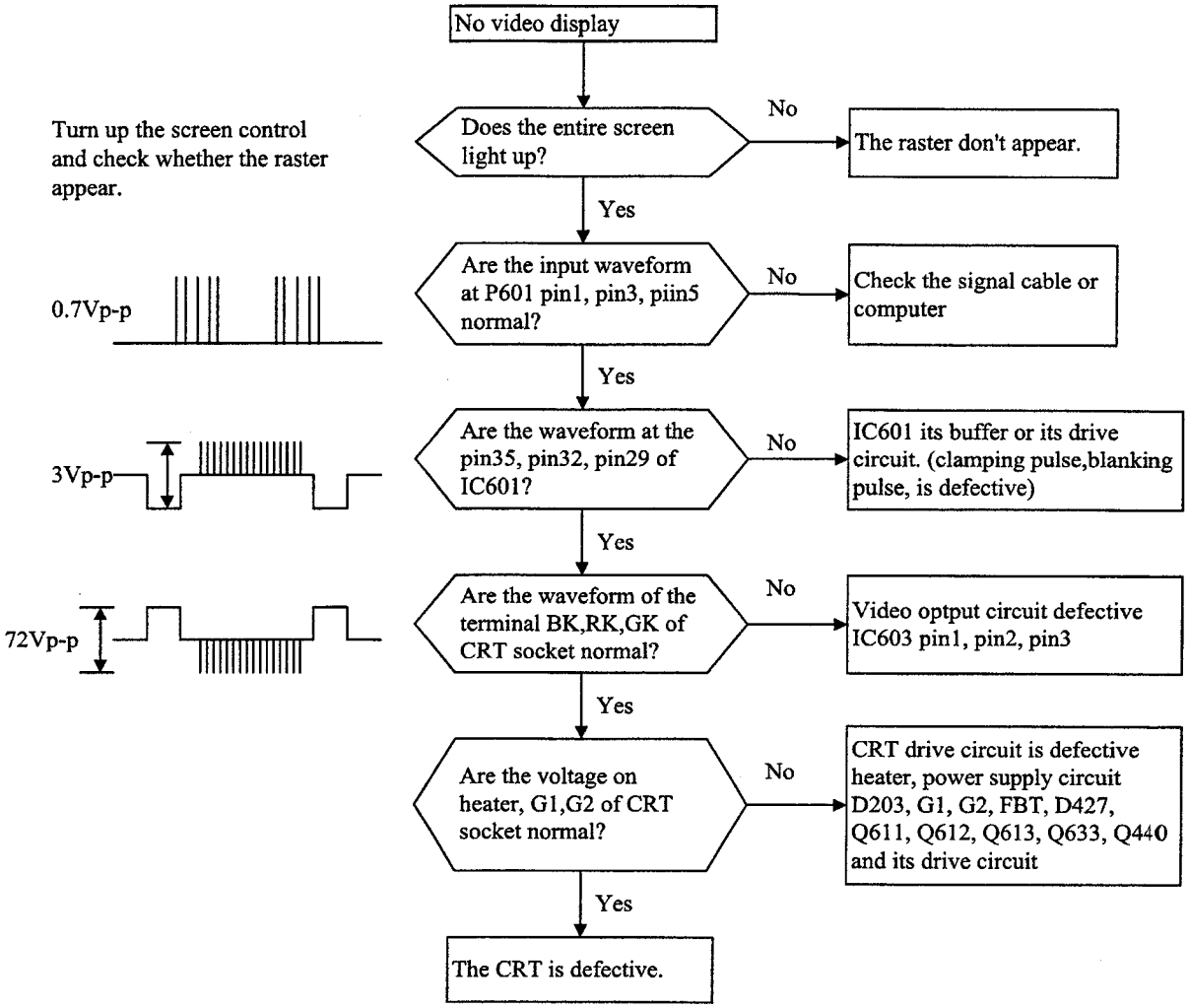

Confidential - Do Not Copy

6. One Color missing

turn up the screen control and check whether the raster appear.

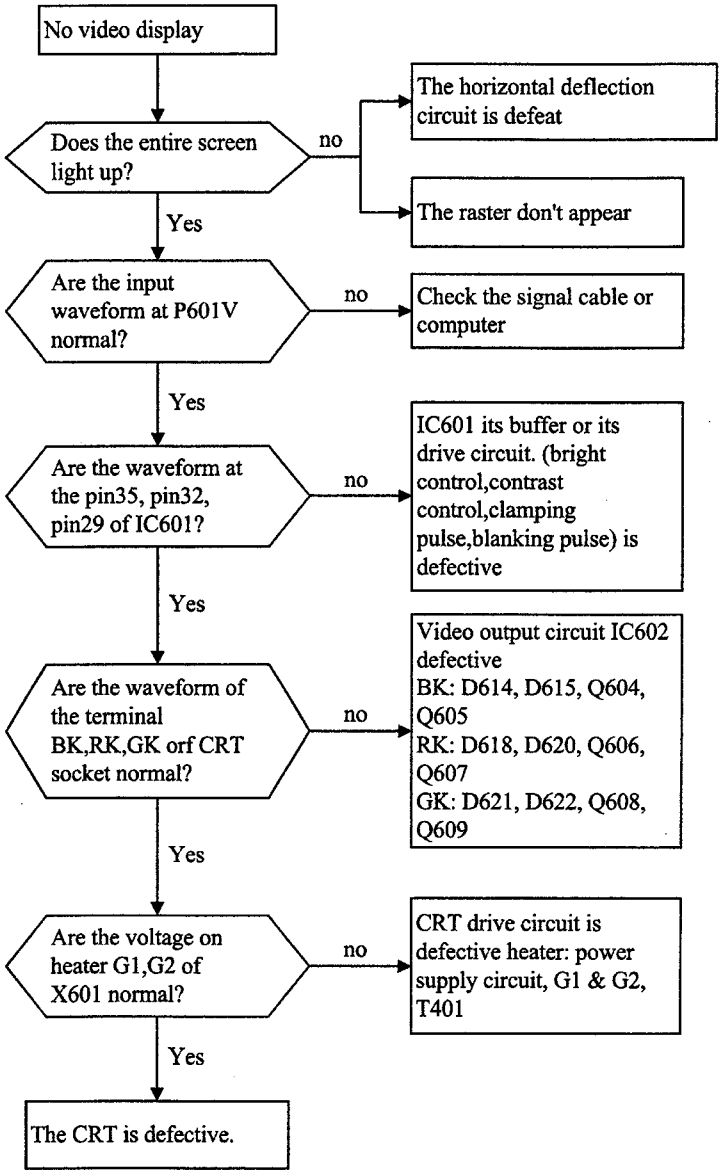

Confidential - Do Not Copy

7. OSD is Defective

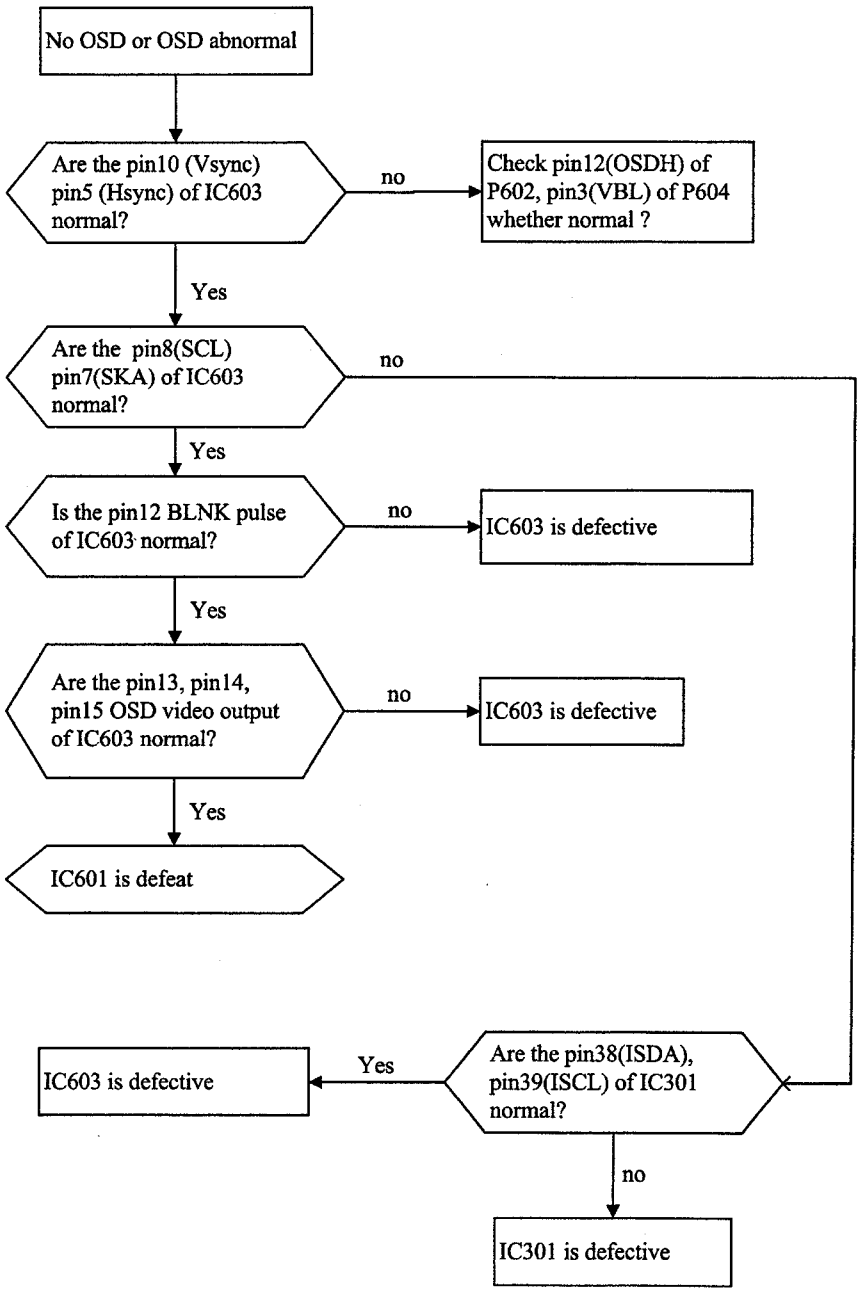

Confidential - Do Not Copy

7. Mechanical assembly

1. E95-1 assembly diagram

Confidential - Do Not Copy

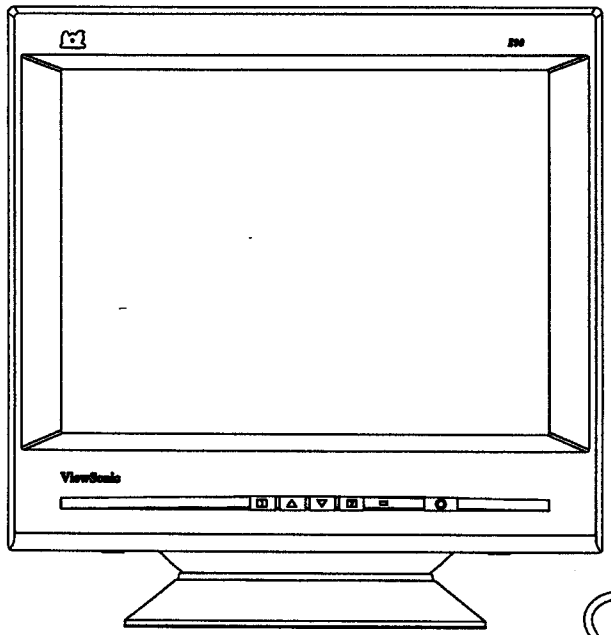

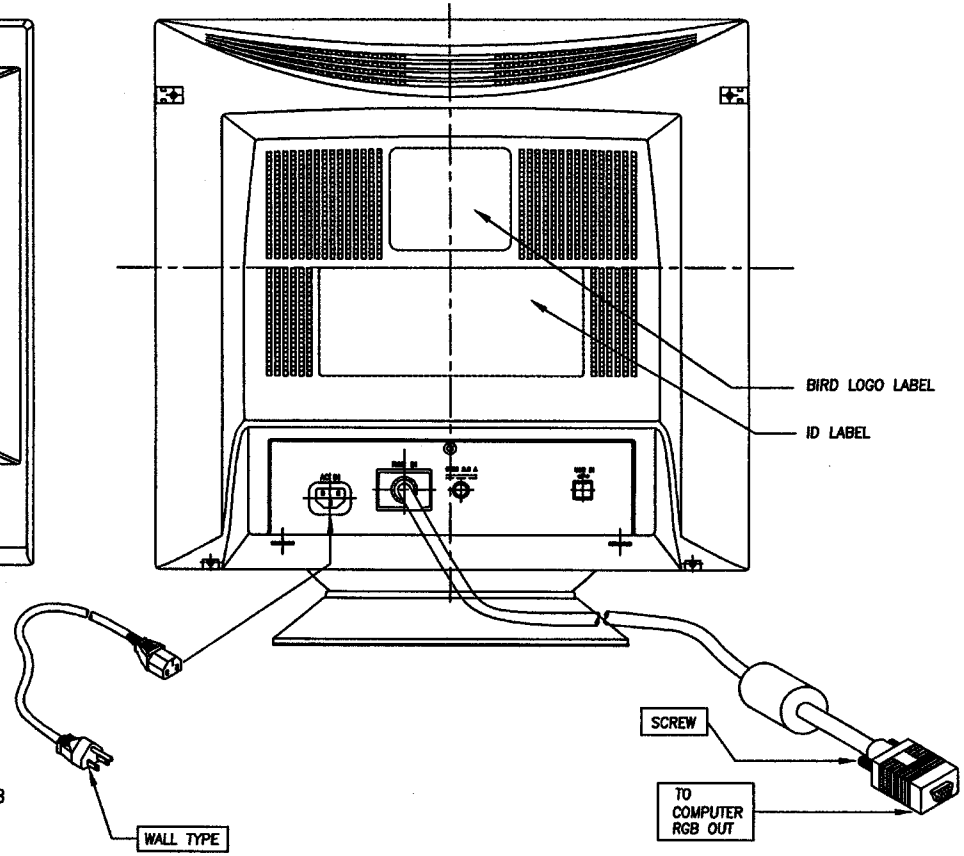

NOTE : UNLESS OTHERWISE SPECIFIED
1.ENSURE THE REAR COVER IS FULLY INSERTED .
AND THEN FASTEN 4PCS SCREWS (P/N:31090222XX USED UPON OF F/B & R/C , P/N : 31090210XX USED ON DOWN OF F/B & R/C) .
2.REMEMBER TO ADHERE ID LABEL ON THE BACK SIDE OF REAR COVER .
3.MAKE SURE THE MOTION BETWEEN TILT AND SWIVEL IS SMOOTH , WITHOUT SQUEAKS AND GAPS , APPLY LUBRICANT ONTO FRICTION SURFACE OF SWIVEL DEVICES IS ACCEPTABLE .
4.PACKING MATERIAL HAVE TO MEET ENG , DEPT , SPEC .
5.INSPECTION REFER TO SPEC. 10000-0153.

Confidential - Do Not Copy

ViewSonic Corporation	DIMENSIONAL TOLERANCES ( ) <30 : ±0.25 >30~100 : ±0.25 >100~300 : ±0.5 ABOVE 300 : ±0.8 HOLES: ±0.05 ( ) DECIMALS X : ±0.3 XX : ±0.2 XXX : ±0.1 ANGLES:±0.5° ( ) UP~100 : ±0.2 100~150 : ±0.25 150~200 : ±0.3 200~250 : ±0.35 250~300 : ±0.4 300~350 : ±0.45 350~400 : ±0.5 ( ) UP~600 : ±1.5 600~900 : ±2.4 900~OVER : ±3.1	Drawn: 詹敏秀 12/29/00	THIRD ANGLE PROJECTION	DESCRIPTION: ENGINEERING NOTECES	
E95	SCALE NP UNIT MM USED ON DE-995 SB 06	Designed: 謝坤儒 12/29/00			
		Checked: 柯金昆 12/29/00	A4 SIZE	DRAWING NO.: 336M2134	REV. 00
		Approved: 唐明德 12/29/00		SHEET 2 TO 3	

FRAME NAME : FR5-5R00.DWG

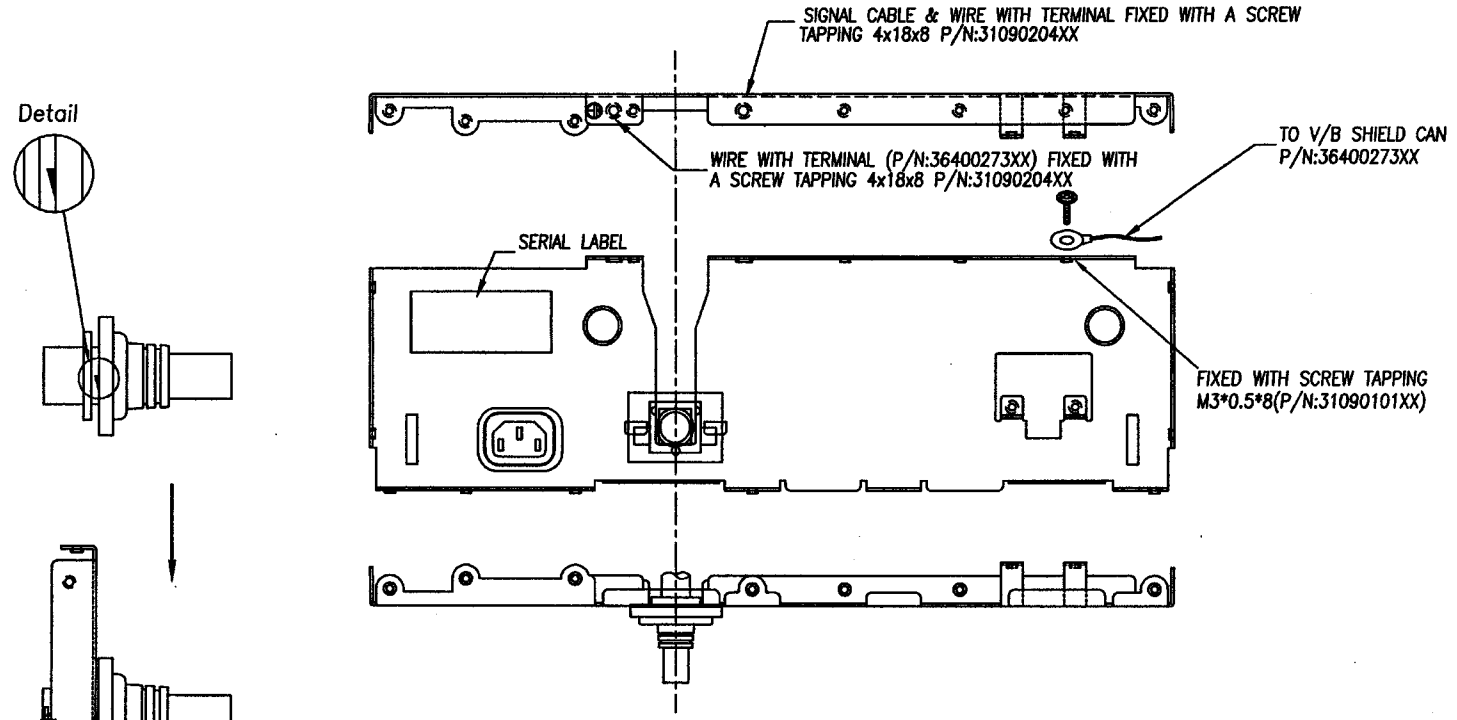

NOTE : UNLESS OTHERWISE SPECIFIED

1. AS SIGNAL CABLE DEVICE AT METAL CHASSIS, S/R FRAME MUST BE LOCK ON TWO RECTANGULAR MOLE OF METAL CHASSIS. SEE LEFT FIGURE.
2. SIGNAL CABLE (P/N:30803028XX L=1.8m IVORY) AND WIRE WITH TERMINAL (P/N:36400273XX) USE SCREW TAPPING P/N:31090204XX TO FIX ON HOLE OF REAR BRACKET (AS UP PICTURE)
3. MAIN BOARD SERIAL LABEL (P/N:32001284XX)

Confidential - Do Not Copy

ViewSonic Corporation	DIMENSIONAL TOLERANCES ( ) ( ) ( ) ( ) <30 : ±0.25 >30~100 : ±0.35 >100~300 : ±0.5 ABOVE 300 : ±0.8 HOLES: ±0.05 DECIMALS X : ±0.3 XX : ±0.2 XXX : ±0.1 ANGLES:±0.5° UP~100 : ±0.2 100~150 : ±0.25 150~200 : ±0.3 200~250 : ±0.35 250~300 : ±0.4 300~350 : ±0.45 350~400 : ±0.5 UP~600 : ±1.5 600~900 : ±2.4 900~OVER : ±3.1	Drawn: 詹敏秀 12/29/00	THIRD ANGLE PROJECTION	DESCRIPTION: ENGINEERING NOTECES
E95	SCALE NP UNIT MM USED ON DE-995 SB 06	Designed: 謝坤儒 12/29/00		
		Checked: 柯金昆 12/29/00	A4 SIZE	DRAWING NO.: 336M2134 REV. 00
		Approved: 唐明德 12/29/00		SHEET 5 TO 6

FRAME NAME : FR5-5R00.DWG

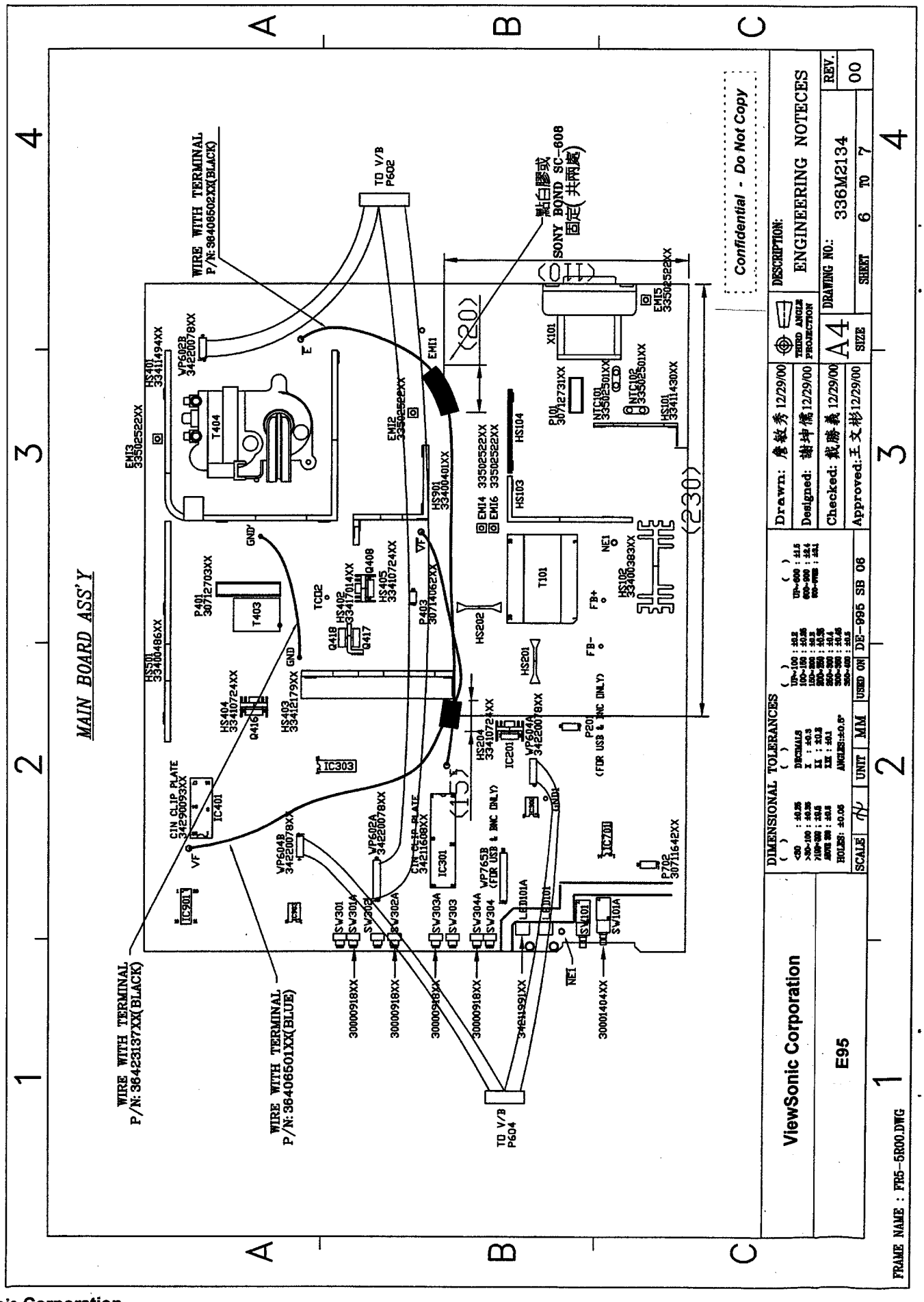
MAIN BOARD ASS'Y
WIRE WITH TERMINAL P/N: 36406502XX(BLACK)
WIRE WITH TERMINAL P/N: 36423137XX(BLACK)
WIRE WITH TERMINAL P/N: 36406501XX(BLUE)
TO V/B P602
TO V/B P604
SONY BOND SC-608
Confidential - Do Not Copy
DESCRIPTION: ENGINEERING NOTECES
DRAWING NO.: 336M2134
REV. 00
SHEET 6 TO 7
A4
Drawn: 詹敏秀 12/29/00
Designed: 謝坤儒 12/29/00
Checked: 戴勝義 12/29/00
Approved: 王文彬 12/29/00
DIMENSIONAL TOLERANCES
SCALE
UNIT MM
USED ON DE-995 SB 06
ViewSonic Corporation
E95
FRAME NAME : FR5-5R00.DWG

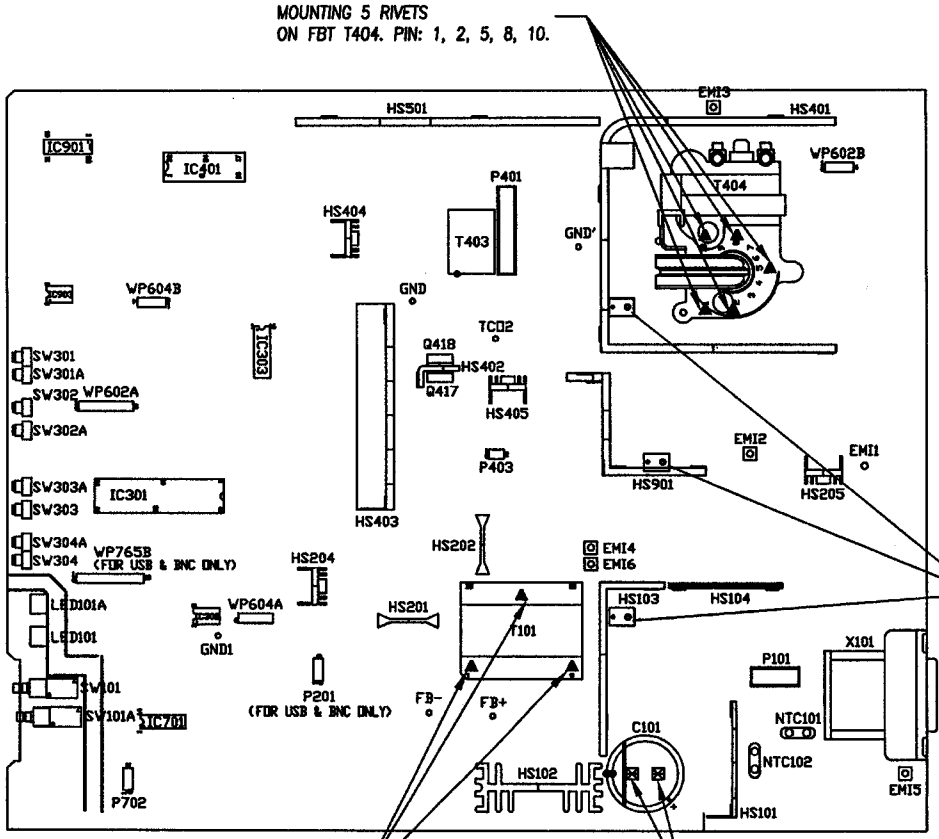

NOTE : UNLESS OTHERWISE SPECIFIED

1.MAIN BOARD 零件需打鉚釘之位置如下:
(a) :TRANSFORMER T101 之 PIN 1,9,14 共三顆
(P/N:33501411XX)
(b) :FBT T404 之 PIN 1,2,5,8,10 共五顆
(P/N:33501419XX)
(c) :CAPACITOR C101 2PINS 共兩顆
(P/N:33501411XX)

2.AC SOCKET 安置在 MAIN BOARD X101. 其定位孔需與 MAIN BOARD 之定位孔對齊, 以利後續動作, 不影響 2顆 SCREW (M3x0.5x10 P/N:31090103XX) 之上鎖

3.REAR BRACKET 安裝在 MAIN BOARD 之後方, 其孔位須對正 MAIN BD 之孔加鎖螺絲, 其中 2顆 (3x0.5x10 P/N:31090103XX) 會一併將 AC SOCKET & MAIN BD 鎖上; 另二顆 (3x0.5x8 P/N:31090101XX) 直接由 MAIN BD 鎖至 REAR BRACKET.

4.WHEN INSERTING THE HS401 & HS501 REMEMBER TO FIX THEM TOGETHER WITH SCREW P/N:31003010XX AT FIRST AND THEN TO TWIST THE HS401 & HS501 6 PCS DEEP PIN ON THE SOLDERSIDE OF PCB BEFORE WAVE SOLDERING.

TO INSERT 3 PCS SPACER SUPPORT P/N:34210479XX
ON THE SOLDER SIDE OF M/B, THEN ADHESIVE THEM WITH WHITE GLUE

Confidential - Do Not Copy

ViewSonic Corporation	DIMENSIONAL TOLERANCES ( ) DECIMALS X : ±0.3 XX : ±0.2 XXX : ±0.1 ANGLES: ±0.5° HOLES: ±0.05	Drawn: 詹敏秀 12/29/00	THIRD ANGLE PROJECTION	DESCRIPTION: ENGINEERING NOTECES
E95	SCALE NP UNIT MM USED ON DE-995 SB 08	Designed: 謝坤儒 12/29/00	A4 SIZE	DRAWING NO.: 336M2134 REV. 00
		Checked: 戴勝義 12/29/00		SHEET 7 TO 8
		Approved: 王文彬 12/29/00		

FRAME NAME : FR5-5R00.DWG

VIDEO BOARD ASS'Y

NOTE : UNLESS OTHERWISE SPECIFIED

1.VIDEO BOARD 零件需打鉚釘之位置如下:

(a) :CRT SOCKET 之 PIN 5,9,12 共三顆
(P/N:33501419XX)

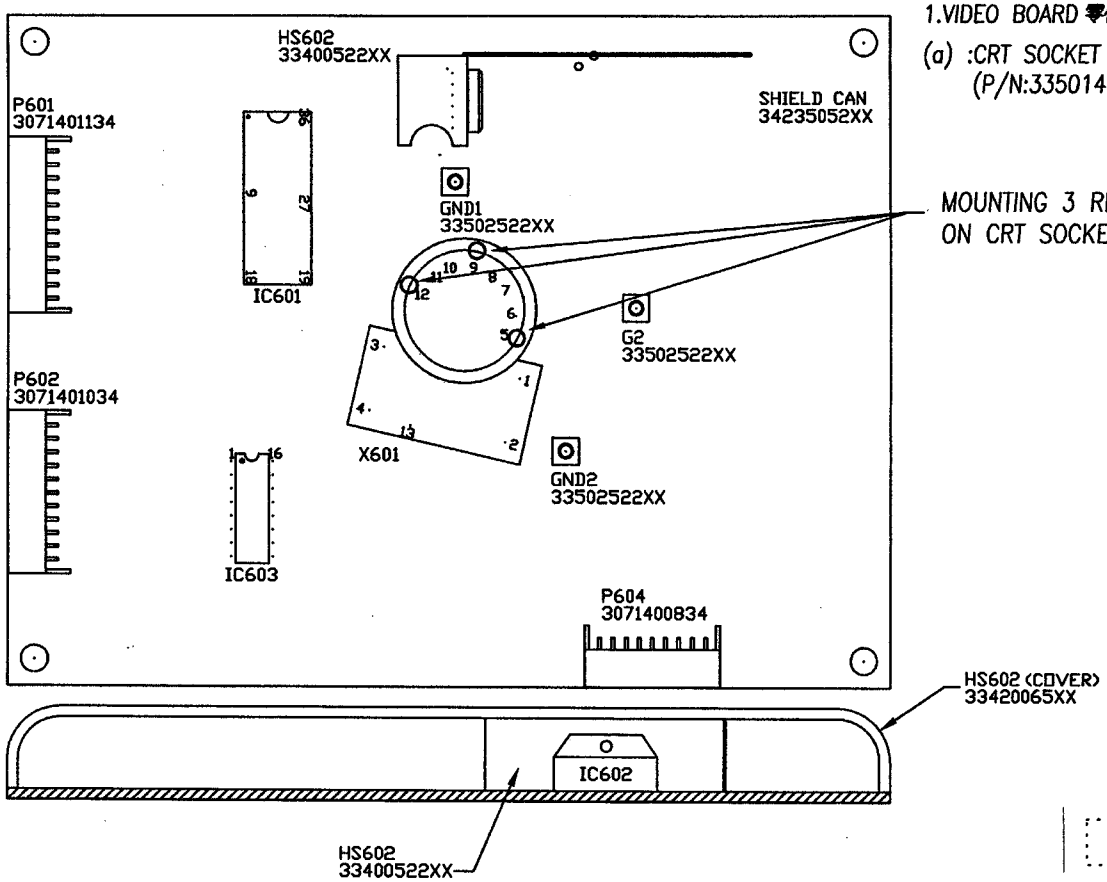

Confidential - Do Not Copy

ViewSonic Corporation	DIMENSIONAL TOLERANCES	Drawn: 詹敏秀 12/29/00	DESCRIPTION: ENGINEERING NOTECES
E95	SCALE / UNIT: MM / USED ON: DE-995 SB 06	Designed: 謝坤儒 12/29/00	THIRD ANGLE PROJECTION
		Checked: 戴勝義 12/29/00	A4 SIZE
		Approved: 王文彬 12/29/00	DRAWING NO.: 336M2134
			SHEET 8 TO 9
			REV. 00

FRAME NAME : FR5-5R00.DWG

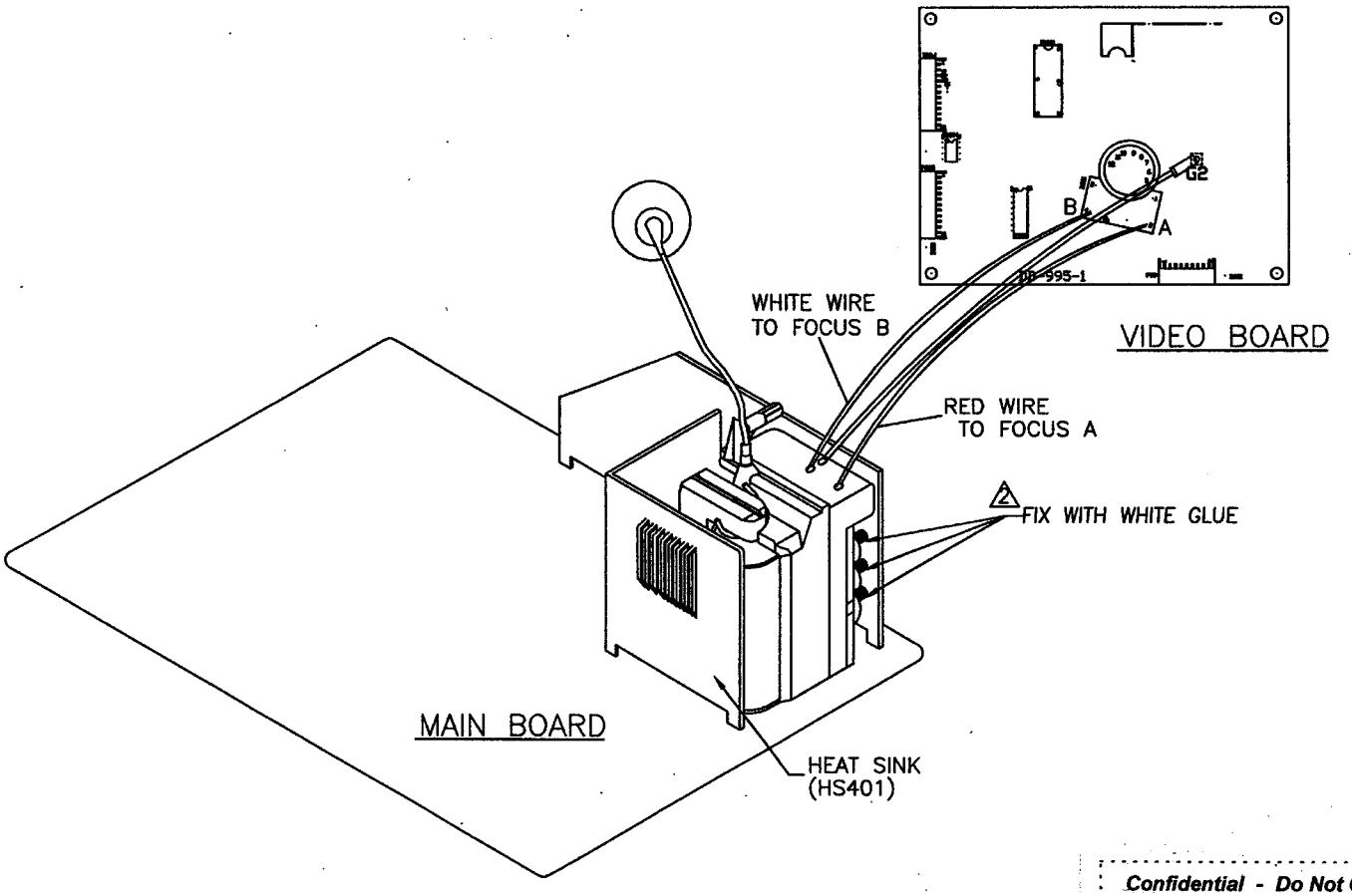

Confidential - Do Not Copy

ViewSonic Corporation	DIMENSIONAL TOLERANCES ( ) DECIMALS X : ±0.3 XX : ±0.2 XXX : ±0.1 ANGLES: ±0.5° HOLES: ±0.05	Drawn: 詹敏秀 12/29/00	THIRD ANGLE PROJECTION	DESCRIPTION: ENGINEERING NOTECES	
E95	SCALE NP UNIT MM USED ON DE-995 SB 06	Designed: 謝坤儒 12/29/00			
		Checked: 戴勝義 12/29/00	A4 SIZE	DRAWING NO.: 336M2134	REV. 00
		Approved: 王文彬 12/29/00		SHEET 9 TO 10	

FRAME NAME : FR5-5R00.DWG

CRT GROUNDING WIRE ASS'Y

1.DEGAUSSING COIL之CONNECTOR WIRE
將 CONNECTOR 插入 MAIN BOARD之P101
如左圖所示.

2.DEGAUSSING COIL 裝置於 CRT上,
需先用二條 CABLE TIE P/N:34210325XX
固定 CRT 之上端左右二角後拉緊,再用二條
CABLE TIE P/N:34210325XX 固定下端之
左右二角拉緊固定之.注意其 DEGAUSSING COIL
固定於 CRT 時其上緣須遠離 CRT之高壓帽的
紅色限制區(如左圖所示)

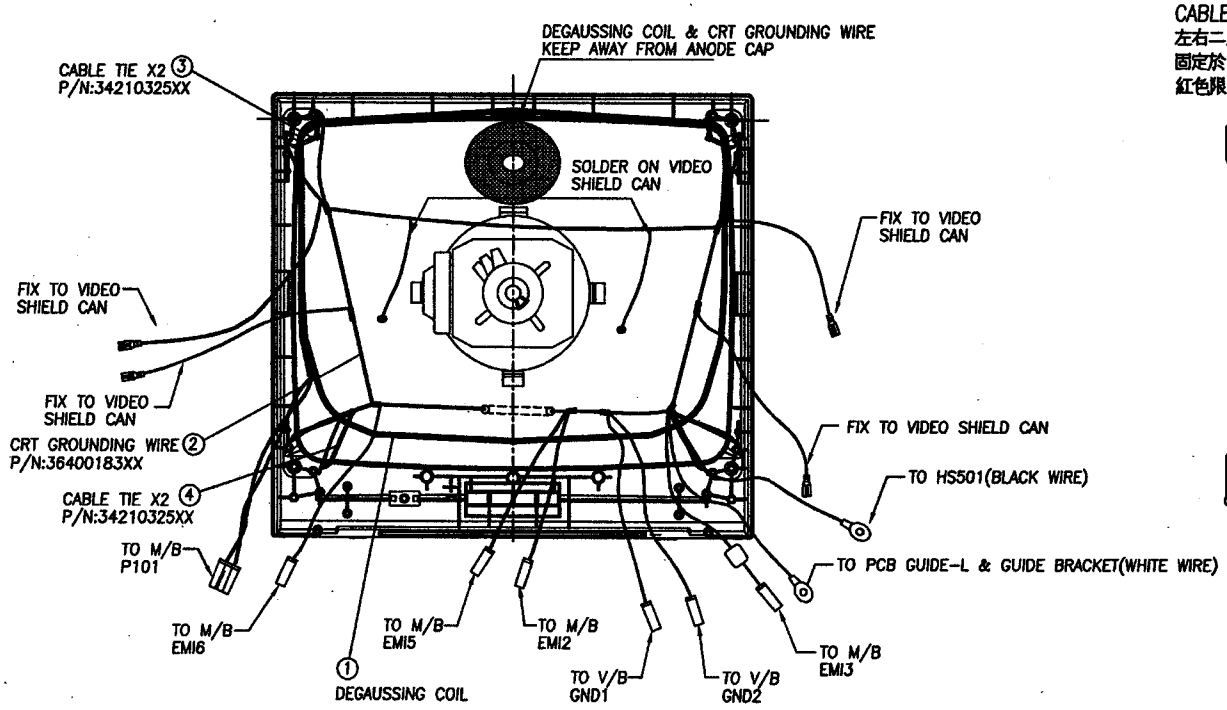

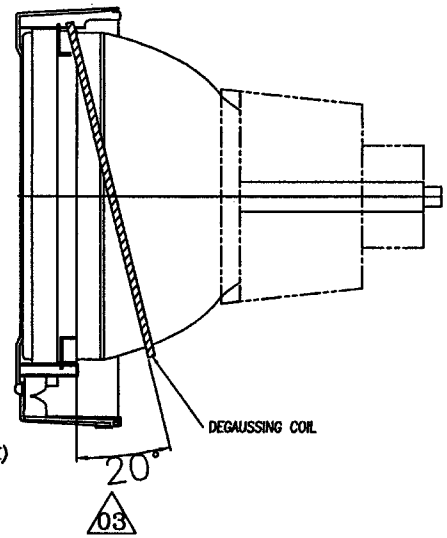

Confidential - Do Not Copy

ViewSonic Corporation	DIMENSIONAL TOLERANCES ( ) DECIMALS X : ±0.3 XX : ±0.2 XXX : ±0.1 ANGLES:±0.5° HOLES: ±0.05	Drawn: 詹敏秀 12/29/00	THIRD ANGLE PROJECTION	DESCRIPTION: ENGINEERING NOTECES
E95	SCALE 1/1 UNIT MM USED ON DE-995 SB 06	Designed: 江政道 12/29/00	A4 SIZE	DRAWING NO.: 336M2134 REV. 00
		Checked: 傅裕元 12/29/00		SHEET 13 TO 14
		Approved: 唐明德 12/29/00		

FRAME NAME : FR5-5R00.DWG

CRT GROUNDING WIRE & VIDEO SHIELD CAN ASS'Y RIGHT SIDE
E90-2G EMI SOLUTION

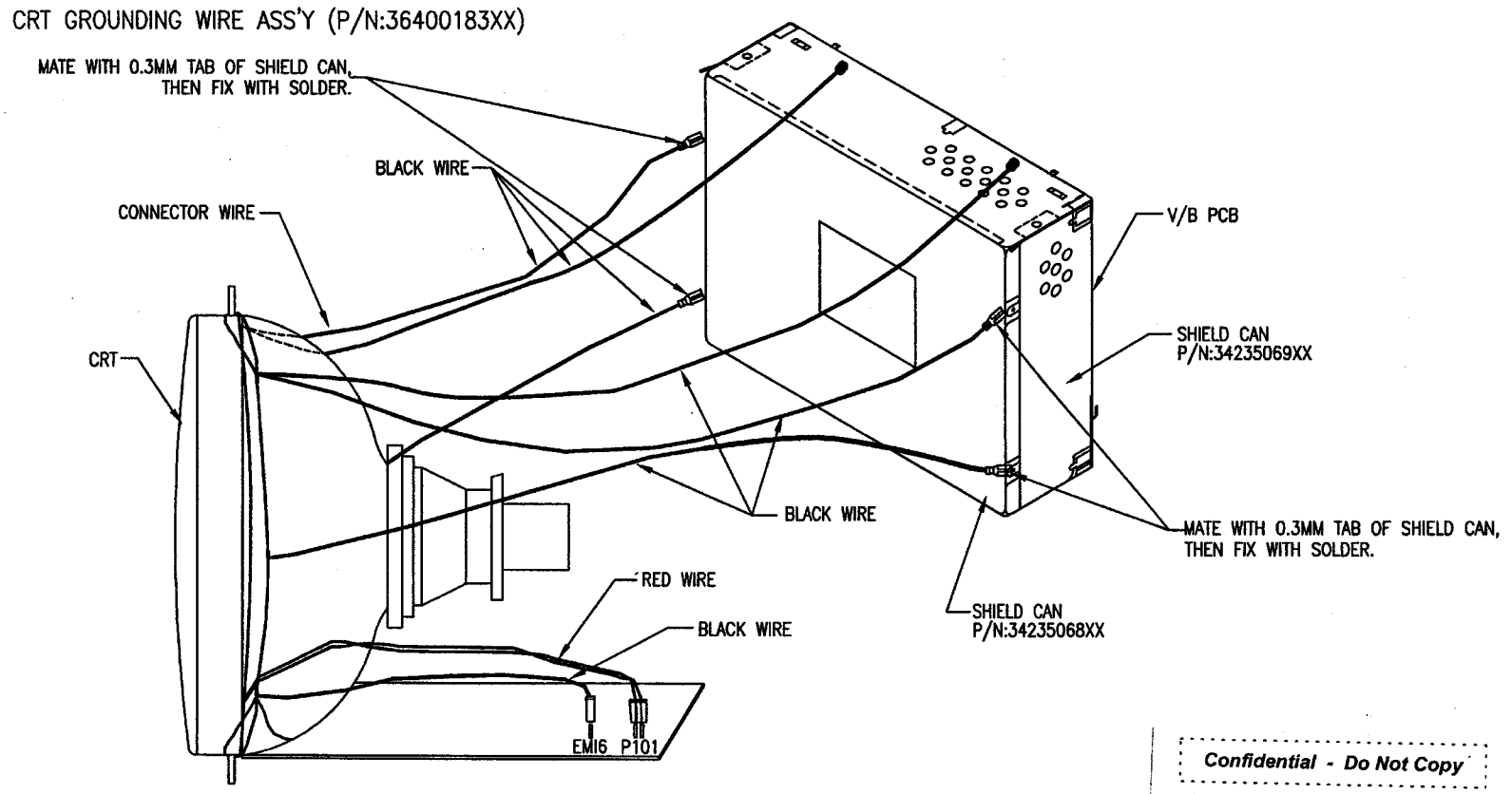

Confidential - Do Not Copy

ViewSonic Corporation	DIMENSIONAL TOLERANCES ( ) DECIMALS X : ±0.5, XX : ±0.2, XXX : ±0.1, ANGLES: ±0.5°	Drawn: 詹敏秀 12/29/00	THIRD ANGLE PROJECTION	DESCRIPTION: ENGINEERING NOTECES	
E95	SCALE — UNIT MM — USED ON DE-995 SB 08	Designed: 傅裕元 12/29/00	A4 SIZE	DRAWING NO.: 336M2134	REV. 00
		Checked: 戴勝義 12/29/00		SHEET 14 TO 15	
		Approved: 王文彬 12/29/00			

FRAME NAME : FR5-5R00.DWG

EMI SOLUTION

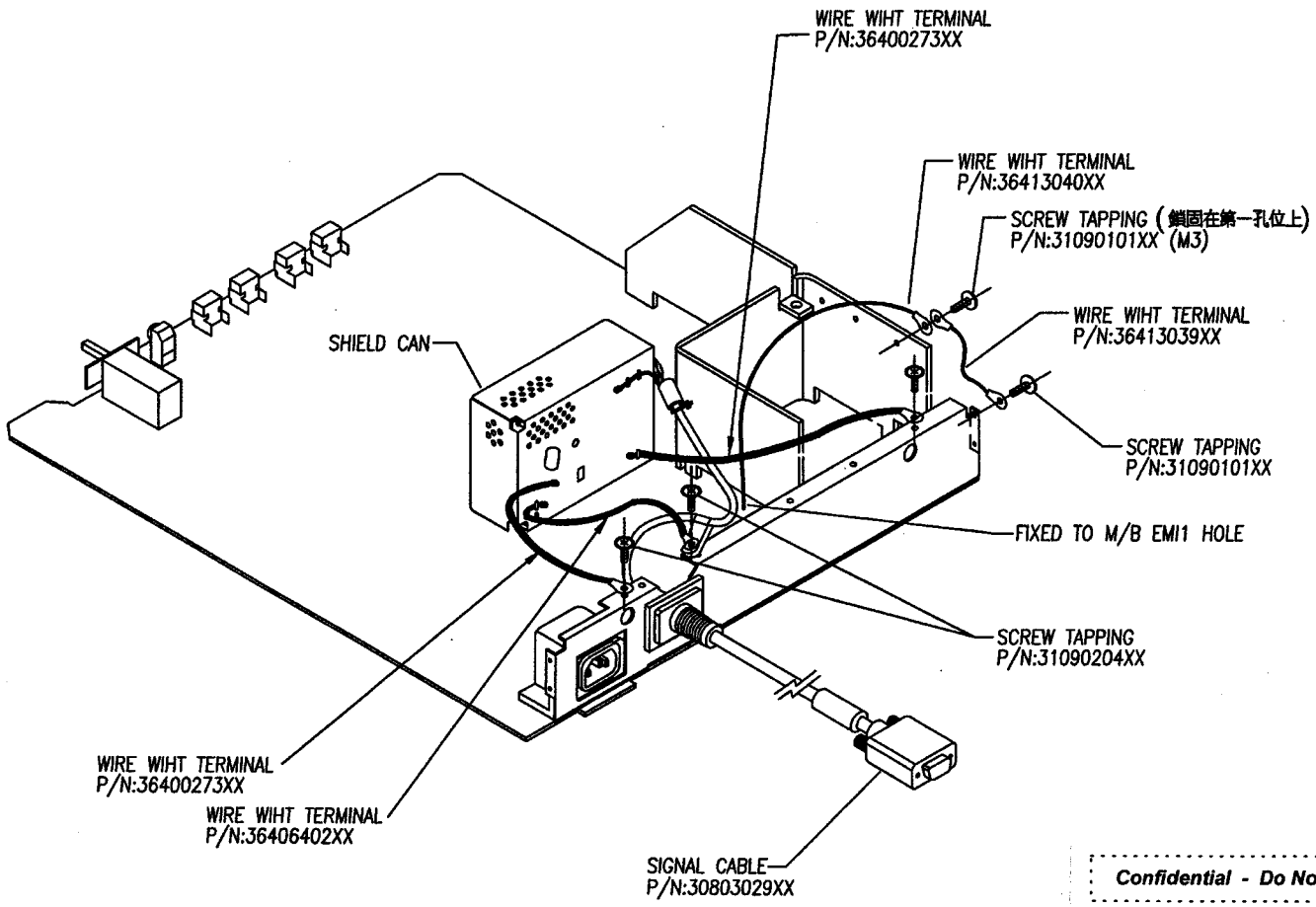

Confidential - Do Not Copy

ViewSonic Corporation	DIMENSIONAL TOLERANCES ( ) <30 : ±0.25 >30~100 : ±0.35 >100~300 : ±0.5 ABOVE 300 : ±0.8 HOLES: ±0.05 ( ) DECIMALS X : ±0.3 XX : ±0.2 XXX : ±0.1 ANGLES:±0.5° ( ) UP~100 : ±0.2 100~150 : ±0.25 150~200 : ±0.3 200~250 : ±0.35 250~300 : ±0.4 300~350 : ±0.45 350~400 : ±0.5 ( ) UP~600 : ±1.5 600~900 : ±2.4 900~OVER : ±3.1	Drawn: 詹敏秀 12/29/00	THIRD ANGLE PROJECTION	DESCRIPTION: ENGINEERING NOTECES
E95	SCALE NP UNIT MM USED ON DE-995 SB 06	Designed: 謝坤儒 12/29/00		
		Checked: 戴勝義 12/29/00	A4 SIZE	DRAWING NO.: 336M2134 REV. 00
		Approved: 王文彬 12/29/00		SHEET 15 TO 16

FRAME NAME : FR5-5R00.DWG

DE-995 SB 06 SCREW TORQUE LIST

ASSEMBLY PARTS	SCREW		TORQUE Kgf.CM	REMARK
	DESCRIPTION	PART NO.		
FRONT BEZEL + REAR COVER	TAPPING SCREW 4x20X16 mm	31090210XX	10~ 18	
FRONT BEZEL + REAR COVER	TAPPING SCREW 4x20x35 mm	31090222XX	10 ~ 18	
CRT + FRONT BEZEL	TAPPING SCREW 5x16x25 mm	31090302XX	22 ~ 24	
HS501 + HS401	SCREW MACHINE M3x0.5X10 mm	31003010XX	5 ~ 10	
FRONT BEZEL + PCB GUIDE	SCREW TAPPING 4x20x16 mm	31090210XX	10 ~ 15	
GUIDE BRACKET + PCB GUIDE	SCREW MACHINE M3x0.5x12 mm	31050310XX	5~ 10	
CRT GROUNDING WIRE + HS501	SCREW MACHINE M3x0.5x8 mm	31003008XX	3 ~ 5	
WIRE WITH TERMINAL + HS401	SCREW MACHINE M3x0.5x10 mm	31003010XX	3 ~ 5	
HSET SINK + (IC501,Q904,D410,Q905,CR101,Q415,IC101,Q417,Q418, Q423,Q424,Q420,Q408,Q416,IC201,Q422,Q421,Q412,Q437)			3 ~ 5	
METAL BRACKET + PCB	TAPPING SCREW 3x0.5x8 mm	31090101XX	10 ~ 15	
METAL BRACKET + PCB + AC SOCKET	TAPPING SCREW 3x0.5x10 mm	31090103XX	10 ~15	
METAL BRACKET + SIGNAL CABLE + FG CABLE	TAPPING SCREW ø4x8 mm	31090204XX	10 ~15	

Confidential - Do Not Copy

ViewSonic Corporation

E95

DIMENSIONAL TOLERANCES

( )
<30 : ±0.25
>30~100 : ±0.35
>100~300 : ±0.5
ABOVE 300 : ±0.8
HOLES: ±0.05

( )
DECIMALS
X : ±0.3
XX : ±0.2
XXX : ±0.1
ANGLES:±0.5°

( )
UP~100 : ±0.2
100~150 : ±0.25
150~200 : ±0.3
200~250 : ±0.35
250~300 : ±0.4
300~350 : ±0.45
350~400 : ±0.5

( )
UP~600 : ±1.5
600~900 : ±2.4
900~OVER : ±3.1

SCALE NP | UNIT MM | USED ON DE-995 SB 06

Drawn: 詹敏秀 12/29/00
Designed: 谢坤儒 12/29/00
Checked: 柯金昆 12/29/00
Approved: 唐明德 12/29/00

THIRD ANGLE PROJECTION

A4 SIZE

DESCRIPTION: ENGINEERING NOTECES

DRAWING NO.: 336M2134

REV. 00

SHEET 16 TO 17

FRAME NAME : FR5-5R00.DWG

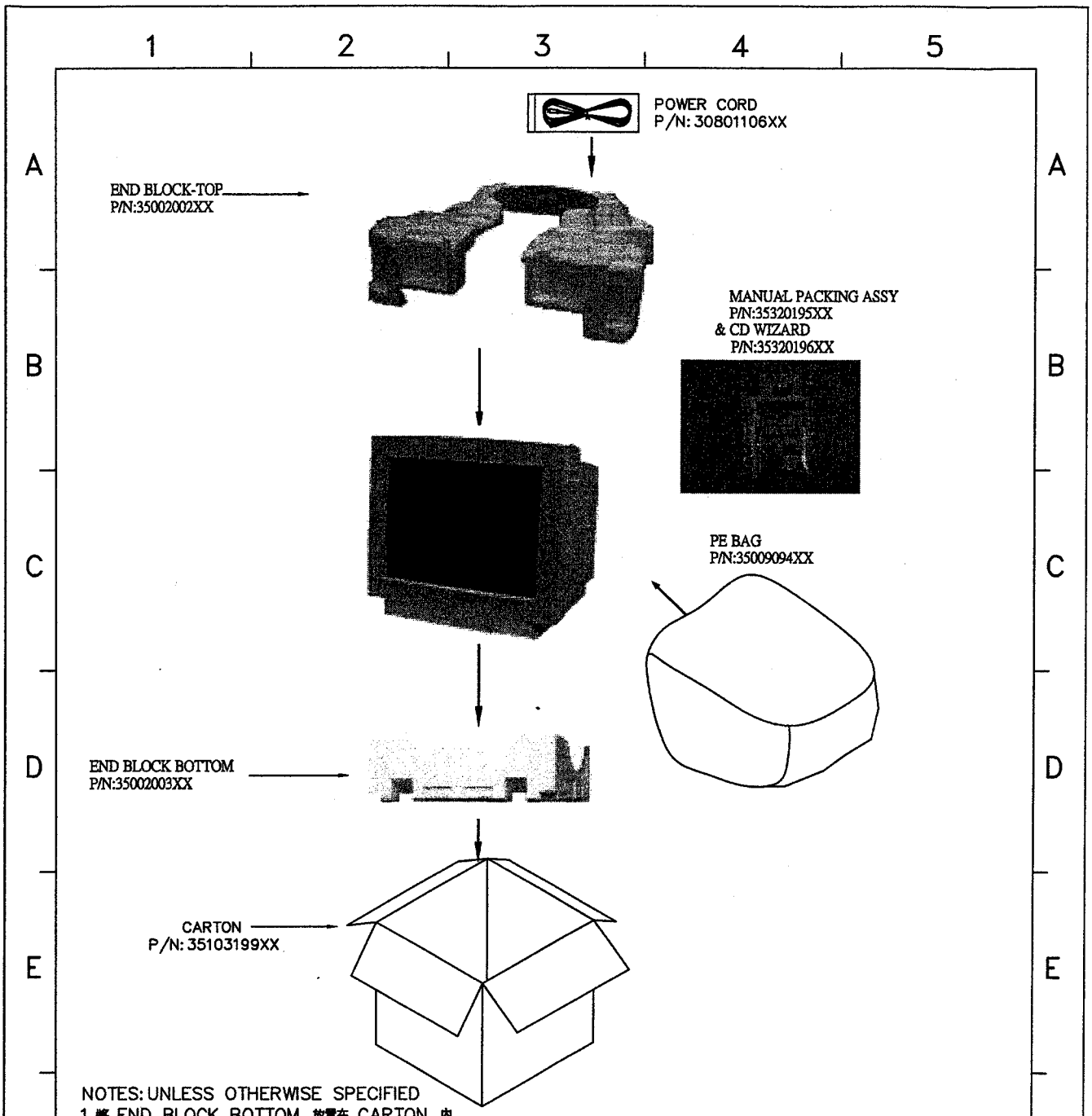

NOTES: UNLESS OTHERWISE SPECIFIED
1. 將 END BLOCK BOTTOM 放置在 CARTON 內.
2. 將 MONITOR 套入PE BAG 內後, 放入END BLOCK BOTTOM 內.
3. 將 MANUAL & PACKING ASSY 放置 MONITOR 後蓋上方, 然後蓋上 END BLOCK-TOP.
4. 將 POWER CORD 置入 MOINTOR 後方與 CARTON 之間.
5. 將 CARTON 上蓋用TAPE封住.

ViewSonic Corporation	Drawn: 詹敏秀
	Designed: 謝坤儒 12/29/00
E95	Checked: 柯金昆 12/29/00
	Approved: 唐明德

DIMENSIONAL TOLERANCES HOLES : ±0.05 ANGLES : ±0.5°

( )		( )		( )		( )	
<30	±0.25	DECIMALS		UP~100	±0.2	250~300	±0.4
>30~100	±0.35	X	±0.3	100~150	±0.25	300~350	±0.45
>100~300	±0.5	X.X	±0.2	150~200	±0.3	350~400	±0.5
ABOVE 300	±0.6	X.XX	±0.1	200~250	±0.35		

UP~600	±1.5
600~900	±2.4
900~OVER	±3.1

THIRD ANGLE PROJECTION

SCALE	1/1	UNIT	MM	USED ON	DE-995SB 06

A4 SIZE

DESCRIPTION 12/29/00
ENGINEERING NOTICES

PART NO.: 336M2134 REV. 00

SHEET 17 TO 18

FRAME NAME : FR5-6R00.DWG

ViewSonic Corporation

E90-2G MPRII SOLUTION

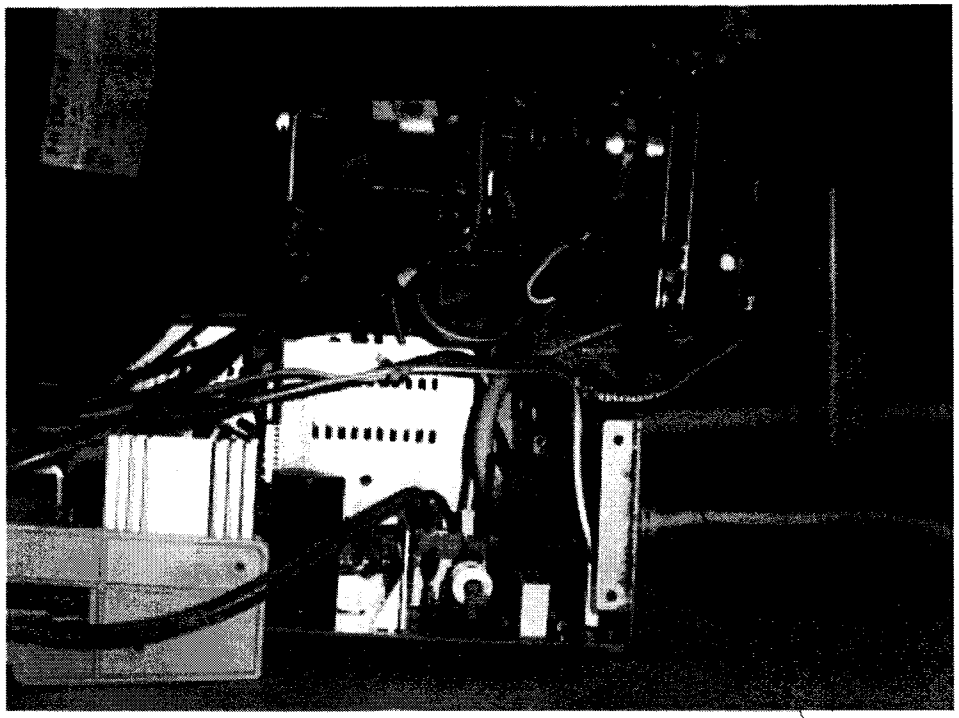

Put the Focus wire under the CRT neck.
Don't use cable tie.

Confidential - Do Not Copy

ViewSonic Corporation	DIMENSIONAL TOLERANCES ( ) <30 ±0.25, >30~100 ±0.35, >100~300 ±0.5, ABOVE 300 ±0.8, HOLES ±0.05 ( ) DECIMALS X ±0.3, XX ±0.2, XXX ±0.1, ANGLES ±0.5° ( ) UP~100 ±0.2, 100~150 ±0.25, 150~200 ±0.3, 200~250 ±0.35, 250~300 ±0.4, 300~350 ±0.45, 350~400 ±0.5 ( ) UP~800 ±1.5, 800~900 ±2.0, 900~OVER ±2.5	Drawn: 詹敏秀 12/29/00	THIRD ANGLE PROJECTION	DESCRIPTION: ENGINEERING NOTECES	
E95		Designed: 謝坤儒 12/29/00			
		Checked: 柯金民 12/29/00	A4 SIZE	DRAWING NO.: 336M2134	REV. 00
	SCALE 1/1 UNIT MM USED ON DE-995 SB 06	Approved: 詹明機 12/29/00		SHEET 19 TO 20	

E95 80

RAME NAME : FR5-5R00.DWG

8. E95-1 Mechanical Parts List

		E95-1M	E95-1E
Item	Part Description	ViewSonic Part No.	ViewSonic Part No.
1	FRONT BEZEL	C-FP-0301-0752	C-FP-0301-0753
2	POWER KNOB	PL-NB-0707-0151	PL-NB-0707-0151
3	POWER SPRING	M-MS-0808-4932	M-MS-0808-4932
4	LED LENS	M-MS-0808-4929	M-MS-0808-4929
5	SCREW LOCKED TAPPING	M-SCW-0824-0395	M-SCW-0824-0395
6	PCB GUIDE - R	M-MS-0808-4931	M-MS-0808-6020
7	PCB GUIDE - L	M-MS-0808-4930	M-MS-0808-6019
8	CRT GROUNDING WIRE	M-WR-0828-0377	M-WR-0828-0377
9	DEGAUSSING COIL	E-L-0407-1108	E-L-0407-1108
10	SHIELD CAN BOTTOM	M-MS-0808-4884	M-MS-0808-4884
11	SHIELD CAN TOP	M-MS-0808-6333	M-MS-0808-6333
12	REAR BRACKET	M-MS-0808-5757	M-MS-0808-5757
13	FUNCTION KEY	PL-FK-0709-0040	PL-FK-0709-0040
14	RUBBER PAD	PL-PD-0714-0021	PL-PD-0714-0021
15	SPONGE	M-MS-0808-4825	M-MS-0808-4825
16	REAR COVER	C-BC-0302-0294	C-BC-0302-0303
17	WASHER	M-MS-0808-3068	M-MS-0808-3068
18	SWIVEL	PL-TB-0717-0080	PL-TB-0717-0080
19	BASE	PL-PS-0715-0115	PL-PS-0715-0115
20	BASE COVER	M-CV-0830-0189	M-CV-0830-0189
21	GUIDE BRACKET ASS'Y	M-MS-0808-5759	M-MS-0808-5759
		M-MS-0808-5527	M-MS-0808-5527
		M-MS-0808-5756	M-MS-0808-5756
22	SCREW	M-SCW-0824-0394	M-SCW-0824-0394
		M-SCW-0824-0414	M-SCW-0824-0414
		M-SCW-0824-0004	M-SCW-0824-0004

Confidential - Do Not Copy

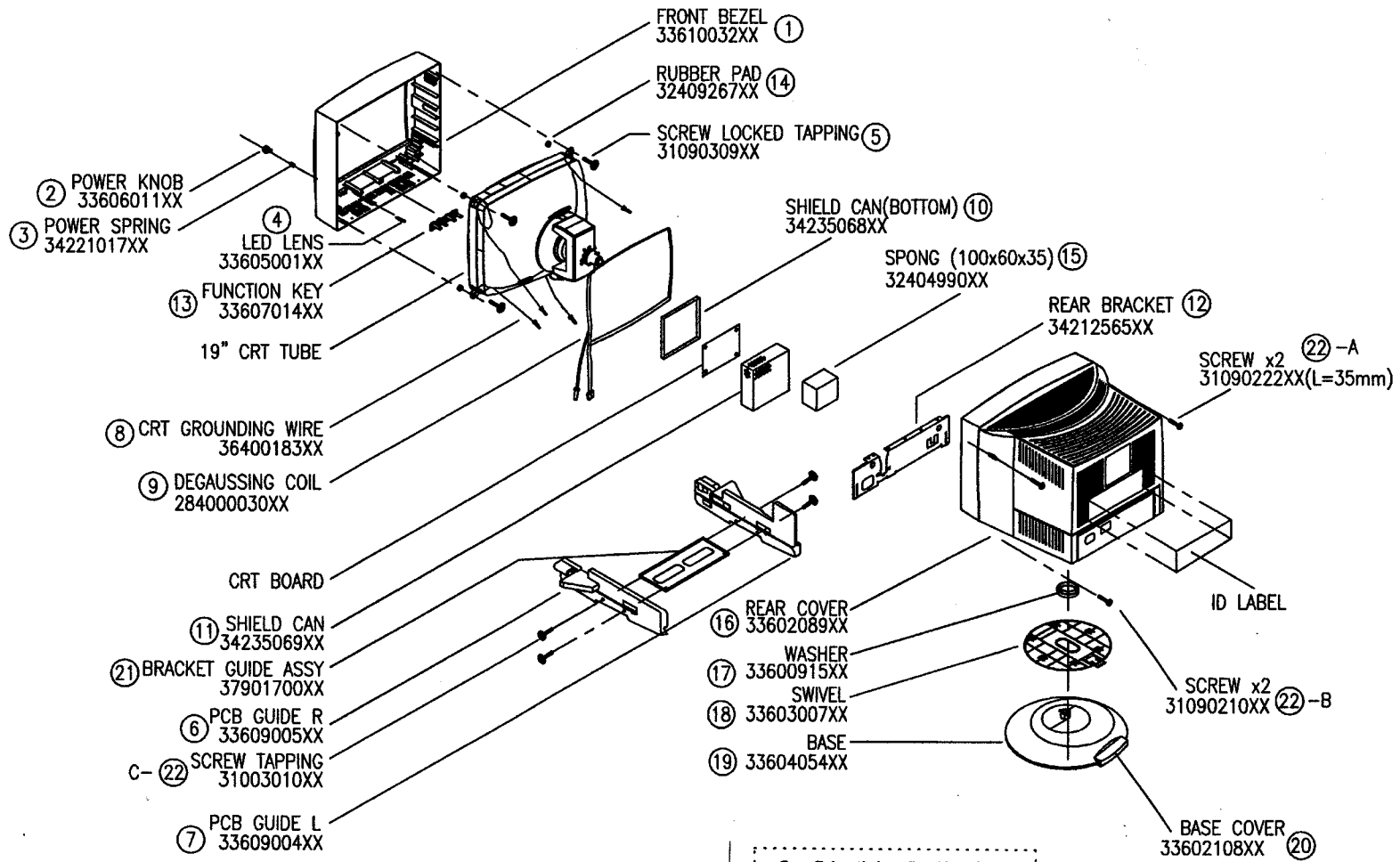

Confidential - Do Not Copy

ViewSonic Corporation	DIMENSIONAL TOLERANCES ( ) <30 : ±0.25 >30~100 : ±0.35 >100~300 : ±0.5 ABOVE 300 : ±0.8 HOLES: ±0.05 ( ) DECIMALS X : ±0.3 XX : ±0.2 XXX : ±0.1 ANGLES: ±0.5° ( ) UP~100 : ±0.2 100~150 : ±0.25 150~200 : ±0.3 200~250 : ±0.35 250~300 : ±0.4 300~350 : ±0.45 350~400 : ±0.5 ( ) UP~600 : ±1.5 600~900 : ±2.4 900~OVER : ±3.1	Drawn: 詹敏秀 12/29/00	THIRD ANGLE PROJECTION	DESCRIPTION: ENGINEERING NOTECES	
E95	SCALE	UNIT MM	Designed: 謝坤儒 12/29/00	A4 SIZE	DRAWING NO.: 336M2134	REV. 00
	USED ON DE-995 SB 06		Checked: 柯金昆 12/29/00		SHEET 3 TO 4	
			Approved: 唐明德 12/29/00			

FRAME NAME : FR5-5R00.DWG

9. PCB layout diagram

1. Mother board

2. Video board

Confidential - Do Not Copy

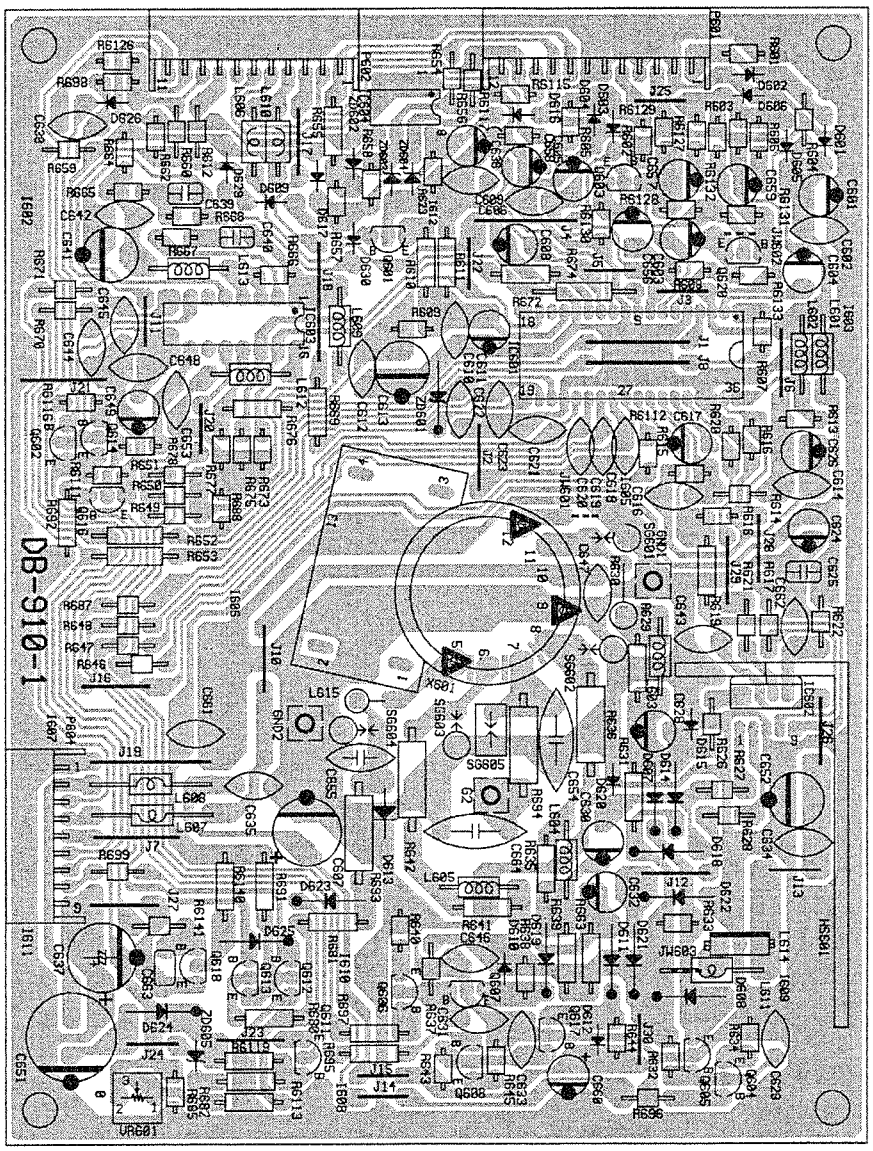

DRAWING NO: PM-1-910-1 REV: 5
USED ON: DB-910-1 REV: 5
MADE BY: BETTY LEE DATE: 09/08/2000

COMPONENT SIDE UNIT: MM

Confidential - Do Not Copy

10. E95-1 Recommended spare parts list

Location	ViewSonic Part No.	Description
IC101	**E-IC-0401-1874**	KA2S1265
IC102, IC104	**E-IC-0401-1873**	TLP721F(D4-GR)
IC203	**E-IC-0401-1356**	TL431CLP-RA
IC201	**E-IC-0401-0621**	MC7812CT
IC202	**E-IC-0401-0403**	XC62AP5002LH
IC301	**E-IC-0401-1877**	IC 8BIT MASK MICRO
IC302	**E-IC-0401-1998**	M24C16-BN6
IC303	**E-IC-0401-1876**	MC14094BCP
IC401	**E-IC-0401-0168**	TDA4856
IC501	**E-IC-0401-0005**	TDA8172
IC404	**E-IC-0401-1125**	UC3843AN
IC901	**E-IC-0401-0646**	M52723ASP
IC601	**E-IC-0401-1264**	M52743BSP
IC602	**E-IC-0401-1818**	LM2435
IC603	**E-IC-0401-1835**	MTV021N-25
IC604	**E-IC-0401-1793**	ST24LC21BB6
R102	**E-R-0405-3364**	RES FUSING MF 1W.22 J
R241	**E-R-0405-0923**	RES FUSING MF 1/2W.22 J
R4122, R4136, R4137	**E-R-0405-0935**	RES FUSING MF 1/2W 2.2 J
R4133	**E-R-0405-5968**	RES FUSING MF 1W .33 J
R4141	**E-R-0405-5354**	RES FUSING MF 1W 1 J
Q102, Q901	**E-Q-0402-1084**	MPSA44M
Q205	**E-Q-0402-1228**	2SC2655Y TEP2
Q201	**E-Q-0402-1176**	2SB857C
Q408	**E-Q-0402-0725**	2SJ449
Q412, Q420, Q421, Q422, Q423, Q424	**E-Q-0402-1258**	IRFS630A
Q416, Q417, Q905	**E-Q-0402-0136**	2SD669AWC
Q418, Q904	**E-Q-0402-0119**	2SB649AC
Q415	**E-Q-0402-1081**	2SC5411(HFE)
Q437	**E-Q-0402-0020**	SSSION60A
Q604, Q606, Q608, Q611, Q903	**E-Q-0402-1207**	BF422 (TE2.T)
Q440, Q605, Q607, Q613, Q617, Q902	**E-Q-0402-1208**	BF423 (TE2.T)
D201, D203	**E-D-0403-1399**	RG4C LFL1
D204, D423	**E-D-0403-0242**	RG4A-LFJ6
D409	**E-D-0403-1571**	RG2
D410	**E-D-0403-1572**	BY459X-1500
D424	**E-D-0403-0920**	BYM26C
D427	**E-D-0403-0912**	UF4006
R4135, R4169	**E-D-0403-1005**	UF4004
D413, D414, D422	**E-D-0403-0913**	UF4003 TAPING

Confidential - Do Not Copy

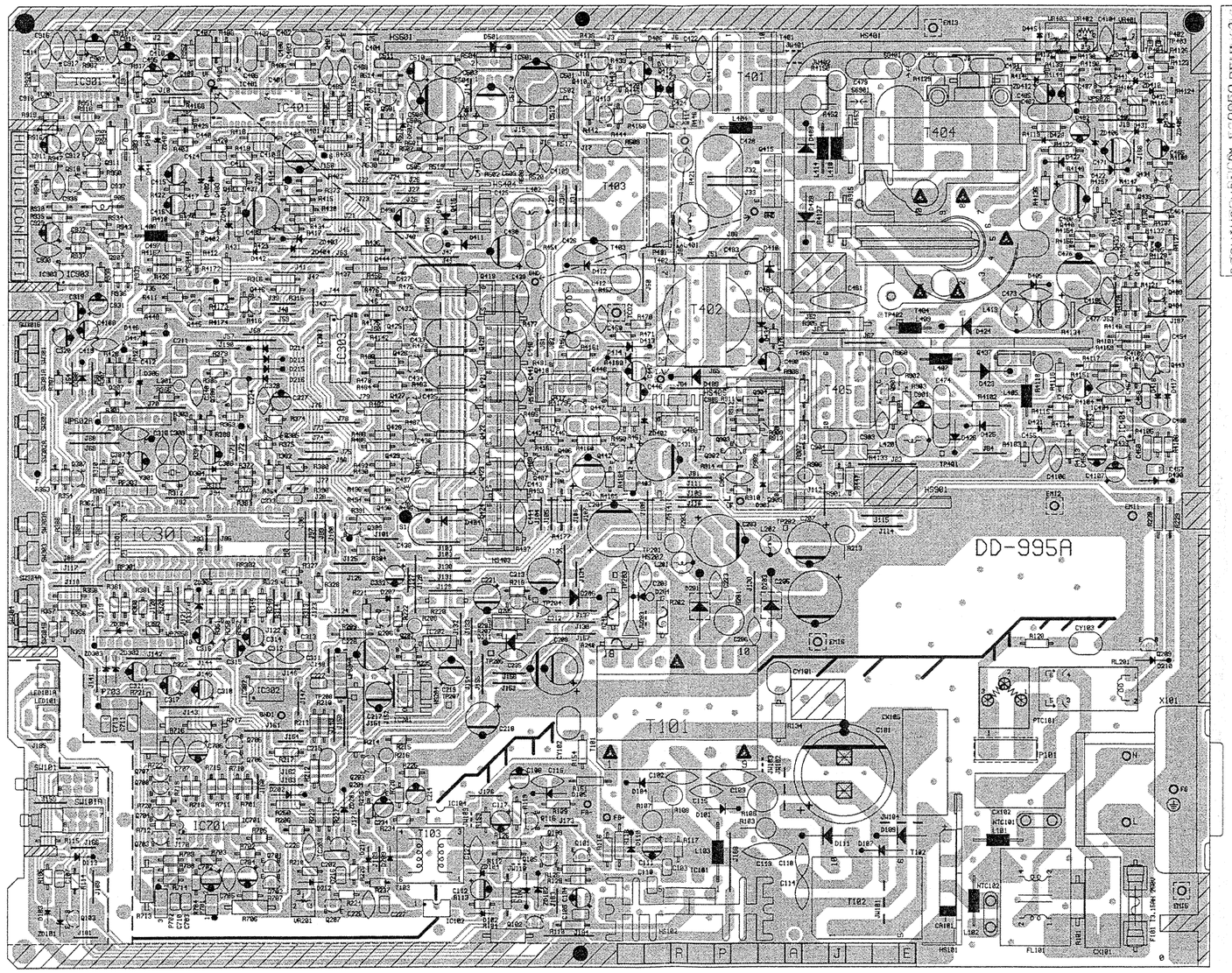

Confidential - Do Not Copy

Location	ViewSonic Part No.	Description
T101	E-T-0408-0335	SMT-42V-866A
T403	E-L-0407-1239	LINEAR COIL 4.9uH K 4P
T401	E-T-0408-0336	DT-E22-02
T402	E-T-0408-0337	19A-9007 REV .A
T404	E-FBT-0406-0219	FBT 19" 31 KHz - 106KHz
T405	E-T-0408-0338	CE-22V-02
Y301	E-X-0415-0055	CRYSTAL 8MHz 30PPM 30PF
F1O1	E-FS-0410-0070	FUSE TSC 3.15A UL SEM PIG
LED	E-D-0403-1668	YEL/GRN 5mm 3 PIN
T102 (For PFC)	E-T-0408-0377	19A-0012B
X601	M-MS-0808-4396	CRT SOCKET
	A-VC-0101-0045	SIGNAL CABLE L=1800 BLACK
E95-1M/1E	P-FM-0602-0527	END BLOCK - TOP
E95-1M/1E	P-FM-0602-0528	END LOCK - BOTTOM
E95-1M/1E	M-MS-0808-6332	MANUAL PACKING ASS'Y
E95-1M/1E	A-CD-E95	CD-ROM ASS'Y
E95-1M/1E	M-MS-0808-6083	COLOR KEY
E95-1M/1E	A-UG-0107-0436	USER'S GUIDE
E95-1M/1E	M-LB-0813-0468	WARNING LABEL
E95-1M/1E	M-MS-0808-6331	PE BAG 225mm*12mm*330mm T=0.06mm
E95-1M/1E	M-MS-0808-4954	PE BAG 1010mm*900mm T=0.045mm
E95-1M/1E	B-VB-0202-0171	VIDEO BOARD ASS'Y
E95-1M/1E	C-BS-0303-0243	SWIVEL BASE ASS'Y ABS 94HB #Y0-
E95-1M/1E	M-CV-0830-0190	SCREW COVER
E95-1E	C-FP-0301-0750	FRONT BEZEL ABS + PC
E95-1E	C-BC-0302-0308	REAR COVER ABS + PC
E95-1E	P-BX-0601-0535	CARTON
E95-1E	B-MB-0201-0515	MAIN BOARD ASS'Y
E95-1E	E-CRT-0409-0103	0.26mm 95KHz M46QCE261X112 (TCO)
E95-1M	C-FP-0301-0749	FRONT BEZEL ABS 94-5V #Y0-487V
E95-1M	C-BC-0302-0317	REAR COVER ABS 94-5V #Y0-487V
E95-1M	P-BX-0601-0534	CARTON
E95-1M	B-MB-0201-0514	MAIN BOARD ASS'Y
E95-1M	E-CRT-0409-0467	0.26mm 95KHz M46QCE261X112 (A)

Confidential - Do Not Copy